JEL PRODUCTS
SUSTAINABLE | LIGHTING | SOLUTIONS

INSTRUCTION MANUAL

Manta Series

Canopy LED luminaire, one manual for the whole series:
the Manta Recess, the Manta Surface and Surface Extended, and the Manta HT to plus 120 degrees Celsius.

DOCUMENT	REVISION	DATE	LANGUAGE
MAN-MNS-EN	2	18 / 11 / 2026	EN



Read before installation · Keep for future use · Qualified personnel only · MNAC01 · MNAC02 · MNAC03 · MNHT01 · MNHT02

JEL Products B.V. · Ampèrestraat 19e · 3861 NC Nijkerk · The Netherlands

jelproducts.nl

Contents

This manual covers the whole Manta Series. Most of what follows applies to every version, because the 380 × 380 mm panel, the glass front and the optics are shared. Where a section applies to one version only, the version is named in the heading or in the row.

BEFORE YOU START

1	**About this document**	Who it is for, symbols, hazard classes, revision history
2	**The product**	The three families, intended use, order codes, the type label
3	**Technical data**	Specification per version, cut-outs and mounting depths, the ceiling bracket, the HT system, standards
4	**Safety**	Electrical, optical, falling, hot surfaces, and what must never be done

INSTALLATION

5	**Preparation**	Transport, storage, contents of the delivery, tools, unpacking
6	**Mechanical mounting**	Recess in a canopy, surface on the ceiling bracket, the CREE 304 retrofit, torques, spill light
7	**Electrical installation**	Mains into the panel with the driver inside, the high temperature system, glands, cable length
8	**Commissioning**	Checks before switching on, first power up, handover
9	**Operation and dimming**	What each version accepts, tuneable white and amber, what the luminaire does by itself

THROUGH LIFE

10	**Maintenance**	Interval, inspection, records, cleaning on a forecourt and in a washdown regime
11	**Fault finding**	Symptom, probable cause, action
12	**Repair and spare parts**	What is replaceable on site and what returns to JEL Products
13	**Removal and disposal**	Taking the luminaire out of service, WEEE, glossary
14	**Appendix**	Declaration of conformity, warranty, contact and documents

WHICH VERSION DO YOU HAVE

Code on the label	Version
MNAC02	Manta Recess, 100 W, 20 mm, driver inside
MNAC01	Manta Surface, 100 W, 95 mm, driver inside
MNAC03	Manta Surface Extended, 185 mm, the CREE 304 retrofit
MNHT02	Manta Recess HT, 50 W, remote driver, to plus 120 °C
MNHT01	Manta Surface HT, 50 W, remote driver, to plus 120 °C

Note that **02 is the Recess and 01 the Surface** on both ranges. The label is on the rear of the panel; section 2.5 explains the second code on it.

PRODUCT PAGE

Photometric files per optic, drawings, both datasheets and the current version of this manual.

jelproducts.nl/en/products/manta-canopy-light

KEEP THIS MANUAL

Store it with the site documentation and pass it on to every person who works on the luminaire.

1 About this document

Read this manual and understand its safety instructions before you install, operate or maintain the luminaire. Failure to do so can result in serious injury or death.

1.1 Who this document is for

This manual is written for the buyer, the installer, the maintenance technician and the end user. Assembly, installation, commissioning and maintenance may only be carried out by a qualified person: someone with electrical training who can recognise the risks described here and avoid the hazards that arise during the work.

Every person who works on the luminaire must have read these warnings and must follow them. Keep the manual for the service life of the installation.

1.2 Hazard classes

Safety information in this manual is graded. The class tells you how serious the consequence is if the instruction is ignored.

DANGER

A hazard with a high level of risk which, if not avoided, will result in death or serious injury.

WARNING

A hazard with a medium level of risk which, if not avoided, could result in death or serious injury.

CAUTION

A hazard with a low level of risk which, if not avoided, could result in minor or moderate injury.

NOTE

Information that matters for a correct result but that is not related to a hazard.

1.3 Symbols



Electrical hazard
Live parts. Isolate the supply before working on the luminaire.



General hazard
Described in the text beside the symbol.



Optical radiation
Do not look into the operating light source.



Hot surface
High temperature range. The panel reaches process temperature.



Crush hazard
A panel above your head during mounting.



Two persons
This step must be carried out by two people.



Read the manual
Read and understand it before use.



Protective earth
Terminal for the protective earth conductor.



CE marking
Complies with the applicable European legislation.



Separate collection
Not unsorted municipal waste.

1.4 Feedback

The latest version is on the product page. If you find an error, write to info@jelproducts.nl. We would rather correct a sentence than have an installer guess.

1.5 Revision history and what this edition replaces

The Manta has been supplied with the DCbright manual of 12 March 2026, one document for the 60 W and 100 W recess and surface versions. **This edition supersedes it.** Where they disagree, this manual applies.

Date	Revision	Change
12 March 2026	-	DCbright Manual Manta, twelve pages, MANTA-60AC and MANTA-100AC in Recess and Surface, standard, OP and PRO. Superseded
7 September 2026	1	First edition of the JEL Products manual, Recess, Surface, Surface Extended and the high temperature versions in one document, to the JEL Products manual standard. **Corrected against the 2026 manual:** the impact rating is IK08 and not IK07, the ambient range is minus 45 to plus 50 degrees Celsius, the service life is TM-21 L90B05 above 360,000 h and not the LM80 figure printed there, the warranty is 5 years and not 3, and the 60 W versions are no longer in the range
18 November 2026	2	Manta HT, MNHT01 and MNHT02: 50 W, 7,500 lm and 150 lm/W, 2.0 m silicone cable as standard, 120 degrees diffuse. Hazard distance and voltage drop recalculated. EMC corrected: EN 55015 and EN 61547 third-party tested, not by TÜV. IEC 60533 withdrawn.

2 The product

The Manta is the canopy luminaire of the range: a 380 × 380 mm cast aluminium panel rated IP69K, with its driver inside, at 224 lumens per watt, the highest efficacy in the JEL range. It recesses into a canopy at 20 mm, surface mounts on a ceiling bracket at 95 mm, or drops into an existing CREE 304 opening at 185 mm. A high temperature version to plus 120 degrees Celsius uses the same panel with the driver outside the heat.

2.1 The three families

Same panel, same glass front, same optic set and the same photometry. What differs is the mounting depth and, on the HT, where the driver sits.

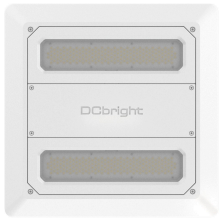

Manta Recess. 20 mm panel in a 270 × 270 mm cut-out, heatsink above the ceiling. MNAC02



Manta Surface and Surface Extended. On the ceiling bracket at 95 mm, or at 185 mm in an existing CREE 304 opening. MNAC01 and MNAC03



Manta HT. Recess or surface, rated to plus 120 degrees Celsius, remote driver on 2 m of silicone cable, Titanium Grey. MNHT02 and MNHT01

	Recess	Surface and Surface Extended	High temperature
Article base code	MNAC02	MNAC01 · MNAC03	MNHT02 recess · MNHT01 surface
Luminous flux	22,400 lm, 20,600 lm with optics	22,400 lm, 20,600 lm with optics	7,500 lm
Power	100 W	100 W	50 W
Efficacy	224 lm/W	224 lm/W	150 lm/W
Ambient	minus 45 to plus 50 °C	minus 45 to plus 50 °C	minus 45 to plus 120 °C
Driver	BLD120 inside the panel	BLD120 inside the panel	Remote BLD120 outside the hot zone, 2 m silicone cable
Depth	20 mm	95 mm · 185 mm	20 mm · 95 mm
Front	Diffuse chemically hardened glass, or diffuse borosilicate, IK08		Diffuse chemically hardened glass or borosilicate, IK08
Optics	None, 136 degrees diffuse, or 30, 60 or 120 degrees		None, 120 degrees. HT optics not possible
Colour	Neutral White e-coating		Titanium Grey e-coating
Termination	H07BQ-F, 4 cores, 2 × 1.5 plus 2 × 0.5 mm², 0.3 m, free ends		SiHF-OB silicone, 4 cores, 2 × 2.5 plus 2 × 0.5 mm², 2.0 m
Weight	3.9 kg	4.9 kg · 5.4 kg	3.9 kg recess · 4.9 kg surface
Warranty	5 years on the complete luminaire		5 years to plus 120 °C

All three mounting depths share one optical platform and one photometry, so one lighting calculation serves a forecourt with recessed and surface positions. The high temperature range has its own photometry. There is no DC Manta and no 316L Manta.

2.2 Intended use

The Manta is intended for permanent professional installation as general lighting under a canopy or a ceiling, outdoors under cover or indoors, within the ambient temperature range of the version you have and on a 90 to 305 VAC supply. It is recessed into the canopy ceiling, mounted on its ceiling bracket, or fitted into an existing CREE 304 opening, always with the glass facing down, and its optic is chosen from a lighting design. Typical applications:

Family	Where it is used
Recess and Surface	Fuel and service station forecourts, truck and fleet fuelling canopies, loading dock canopies and shelters, covered walkways and passenger canopies, car park entrances and pay stations, drive through lanes, wash bay and inspection canopies, weighbridge and gatehouse covers, covered process areas
Surface Extended	The same positions where an existing CREE 304 canopy luminaire is replaced without cutting or patching the canopy
High temperature	Oven and kiln roofs, drying chambers and curing tunnels, bakery and food process ovens, paint lines and powder coating booths, heat treatment and annealing chambers, climate and test chambers, sterilisation and autoclave rooms, process canopies and extraction hoods, foundry and melt shop covered walkways, boiler house ceilings

2.3 What the luminaire is not for

The following uses are outside the intended use. They are not covered by the warranty and, in several cases, they are unsafe.

- **Explosive atmospheres.** No Manta is ATEX or IECEx certified. On a fuel forecourt the canopy ceiling is normally outside the zoned area around the dispensers; that is a matter for the site's hazardous area drawing, not for the luminaire.
- **A DC supply.** There is no DC Manta. Every version is a 90 to 305 VAC luminaire.
- **Ambient above plus 50 degrees Celsius** for the standard versions, and above plus 120 for the high temperature versions.
- **Permanent immersion.** IP68 is verified as a test class, not as a continuous operating condition. IP69K covers washdown, not submersion.
- **Mounting in any attitude other than glass down.** The Manta is a ceiling luminaire. There is no bracket for a wall or a mast.
- **Open area lighting from the canopy edge.** The diffuse panel lights the area under the canopy. The forecourt approach, the car park and the boundary are the DarkLicht D or the DarkLicht WP.
- **Boxing in the heatsink.** The recessed heatsink above the ceiling needs 75 mm of free air above it. A canopy void packed with insulation is not free air.
- **Consumer, decorative or domestic lighting.**
- **Emergency or escape route lighting.** No Manta has battery back up or a self test.
- **Operation with a damaged glass, panel, seal or cable**, or on the high temperature versions with a driver other than the BLD120 supplied for that luminaire.

2.4 Order codes

MNAC01-50K.30

MNAC02	Manta Recess, 100 W, 20 mm, driver inside
MNAC01	Manta Surface, 100 W, 95 mm, driver inside
MNAC03	Manta Surface Extended, 185 mm, also the CREE 304 retrofit panel
MNHT02 · MNHT01	Manta HT Recess and Surface, 50 W, remote BLD120
57K to 22K	5700, 5000, 4000, 3000, 2700 K, amber 2200 K. HT: 6500, 4000, 2700 K only
BIC	Bi-colour, tuneable white 4000 K with 2200 K and 1700 K, switched in operation, section 9.3. Not on HT
.30 .60 .120	Optic. Without a suffix the luminaire is supplied without optics, 136 degrees diffuse, at 22,400 lm
BORO	Diffuse borosilicate front instead of chemically hardened glass

Front material, control protocol and the Ra 80 or Ra 90 option are confirmed at quotation and are not part of the code. On the HT versions cable length beyond 2.0 m and the driver placement are confirmed at order.

NOTE, THE SURFACE EXTENDED CODE

The Manta datasheet of August 2026 lists the Surface Extended and the CREE 304 retrofit panel as one article with **no code yet issued**. Our product specification carries it as **MNAC03**, and that is the code used in this manual and in the photometric files. The label on a delivered luminaire shows the code that applied at the time.

2.5 The type label, and the second code on it

The type label on the rear of the panel carries the article code, the electrical data, the protection class, the ingress rating and the serial number. It also shows a **second code that is not an article number and that will not match what you ordered**. That is correct and it is deliberate.

NOTE

The second code is a JEL Products internal production code, such as MANTA-100AC-SURFACE-PRO. It records the specific printed circuit board fitted, the production batch and the production date. We use it for traceability, for warranty and for service. It carries no information you need in order to specify, order or reorder a luminaire.

When you contact us about a luminaire, quote both. The article code tells us what it is. The internal code tells us exactly which one it is, which board is in it and when it was built. **Photograph the label before you fit the panel:** once it is in the canopy the label faces the void.

WARNING, STANDARD AND HT LOOK ALIKE

The standard Manta carries its driver inside and takes **mains** on its tail. The Manta HT has no driver inside and takes the **driver output** on its silicone tail. Mains on an HT tail destroys the luminaire. Read the label and look at the cable: black H07BQ-F is the standard version, silicone is HT.



The rear of the Manta Surface: the fin fields, the driver compartment cover in the centre and the type label

3 Technical data

All values apply to the standard configuration without optics at 25 degrees Celsius ambient, including driver consumption. With optics the flux of the standard versions is 20,600 lm. A hyphen means the entry does not apply to that version.

	Recess MNAC02	Surface MNAC01	Surface Extended MNAC03	HT MNHT02, MNHT01
PERFORMANCE				
Luminous flux	22,400 lm without optics, 20,600 lm with optics			7,500 lm
Power consumption	100 W			50 W
Efficacy	224 lm/W			150 lm/W
Colour temperature	5700, 5000, 4000, 3000, 2700 K, amber 2200 K, and tuneable white 4000 K with 2200 K and 1700 K			6500, 4000 or 2700 K, no tuneable white
Colour rendering	Ra above 70 standard, Ra 80 or Ra 90 on request. MacAdam step 3 or better			
Optics	Without optics 136 degrees diffuse, or 30, 60 or 120 degrees			120 degrees diffuse. HT optics not possible
Upward light output ratio	0 per cent, by construction: the panel is in a ceiling			
ELECTRICAL AND DRIVER				
Supply voltage range	90 to 305 VAC, 50 or 60 Hz			
Current draw	0.83 A at 120 V, 0.45 to 0.36 A at 220 to 277 V			0.42 A at 120 V, 0.23 to 0.18 A at 220 to 277 V
Driver	BLD120 inside the panel, no external box			BLD120 outside the hot zone, bare or in a DRB-1
Driver case temperature and life	Tc minus 40 to plus 90 °C. Above 100,000 h at Tc 75 °C, MTBF above 320,000 h			
Inrush current	66.8 A peak, T50 350 µs at 220 V			
Luminaires per MCB, B16 · C16 · C25 · D16	5 · 8 · 13 · 17			
Surge protection	6 kV line to line, 10 kV line to earth, IEC 61000-4-5			
Power factor	Above 0.9 at 70 to 100 per cent load			
Dimming	0 to 10 V, PWM, DALI-2, or set over NFC on the driver			
Cable and termination	H07BQ-F, 4 cores, 2 × 1.5 plus 2 × 0.5 mm², 0.3 m, free ends: mains and the dimming pair			SiHF-OB silicone, 4 cores, 2 × 2.5 plus 2 × 0.5 mm², 2.0 m: driver output and the temperature pair

Luminaires per MCB is the manufacturer figure for the BLD120 on an ABB S200 at 220 V, a guide for engineering and not a substitute for the installation calculation. A tuneable white or high CRI build changes the luminous flux, and the quotation states the figure that applies.

3 Technical data, continued

	Recess, Surface, Surface Extended	High temperature
CONSTRUCTION		
Housing	Cast aluminium, less than 0.08 per cent copper, 380 × 380 mm panel	
Surface finish	Conversion layer plus two layer titanium-based e-coating, Neutral White	The same e-coating, Titanium Grey
Bracket	Fixed. Recess: the panel rim on four M4 screws. Surface: the aluminium ceiling bracket, section 3.2	
Front	Diffuse chemically hardened glass, or diffuse borosilicate on request	Diffuse chemically hardened glass, or diffuse borosilicate where the glass sees radiant heat
Protection class	Class I on MNAC01 to MNAC03, the driver is inside and the panel is earthed. Class II on the HT versions, where the driver box is earthed instead	
Ingress protection	IP66, IP67, IP68 and IP69K, each class tested separately, so IP69K does not imply IP68	
Impact resistance	IK08, IEC 62262, set by the glass front	
Corrosion class	C5 industrial and marine, ISO 9223. There is no 316L Manta	
DIMENSIONS, LIFE AND WARRANTY		
Panel	380 × 380 mm, corner radius 15 mm	
Depth below the ceiling	20 mm recess, 95 mm surface, 185 mm surface extended	20 mm recess, 95 mm surface
Above the ceiling, recess	60 mm of heatsink through a 270 × 270 mm cut-out, plus 75 mm of free air	
Weight	3.9 · 4.9 · 5.4 kg	3.9 kg recess, 4.9 kg surface, plus 800 g driver outside the hot zone
Ambient temperature	minus 45 to plus 50 degrees Celsius	minus 45 to plus 120 degrees Celsius
Storage temperature	minus 45 to plus 50 degrees Celsius, dry, in the original packaging	
LED service life, TM-21 L90B05	above 360,000 h at 50 °C	See the ladder in section 3.3
Warranty	5 years on the complete luminaire	5 years on the complete luminaire to plus 120 °C

WHERE THE DRIVER IS

On a canopy there is no space above the ceiling for a driver box and no access to it once the panel is in. The standard Manta therefore carries its BLD120 **inside the panel** and is still IP69K: mains goes straight into the luminaire on the four core tail, two cores of 1.5 mm² for the supply and two of 0.5 mm² for the dimming signal. On the high temperature version the driver leaves the panel and the hot zone entirely, and the four core silicone tail carries the driver output and the temperature signal instead, section 3.3.

NOTE, 224 LUMENS PER WATT IS NOT A TYPING ERROR

It comes from a large LED count driven far below its maximum, combined with a build that has no optic in front of the LEDs. That is also why the junction temperature stays low on a canopy that burns most of the year. With optics the figure is lower and is stated separately.

THREE THINGS THIS RANGE DOES NOT DO

DC supply	Not available. For a DC canopy on a vessel or a machine see the Linear DC
HT optics	The panel is too shallow to carry one. Both HT versions are 120 degrees diffuse; for high temperature with optics see the Linear HT, the Barracuda HT or the Orca HT
Surface Extended in HT	Not available. The HT range is recess and surface

3.1 Dimensions, cut-outs and mounting depths

All drawings are dimensioned in millimetres and are taken from the production drawings of the recess, surface and surface extended versions. DXF and STEP models are available on request. The figures the canopy builder needs are the cut-out and the hole pattern; the depth decides which version fits the ceiling you have.

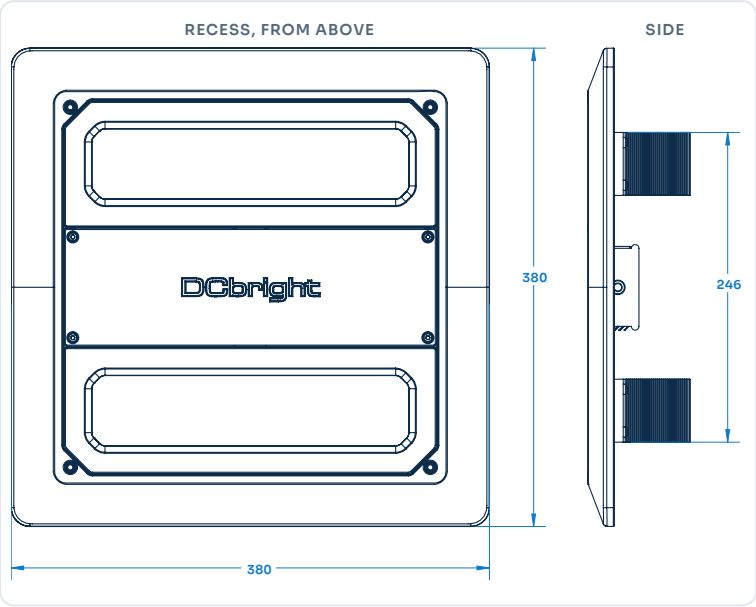

Manta Recess from above and from the side. The 380 × 380 mm panel with its 21 mm rim, and the heatsink of 60 mm that goes through the ceiling. 81 mm in total, plus 75 mm of free air above the fins

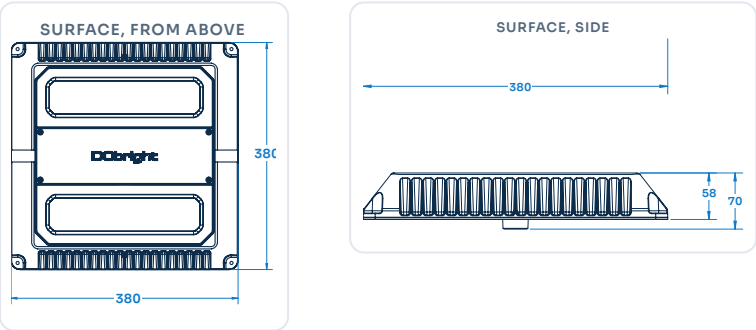

Manta Surface from above and from the side: the fin fields, the driver compartment cover in the centre, 58 mm to the top of the fins and 70 mm over the cover

RECESS, MNAC02 AND MNHT02	
Cut-out	270 × 270 mm, corner radius 10 mm
Fixing holes	4 × M4 on a 286 × 286 mm pattern, through the panel rim
Below the ceiling	20 mm
Above the ceiling	60 mm heatsink, plus 75 mm free air
SURFACE, MNAC01 AND MNHT01	
Fixing holes	4 × M5 on a 358 × 358 mm pattern, the studs of the ceiling bracket
Cable hole	Ø 36 mm in the centre of the ceiling, 190 mm from two edges
Below the ceiling	95 mm, bracket and luminaire together
SURFACE EXTENDED, MNAC03	
Below the ceiling	185 mm. Drops into an existing CREE 304 opening
Cable entry	Ø 20 mm in the side of the skirt, or through the ceiling
WEIGHT	
Recess · Surface · Extended	3.9 · 4.9 · 5.4 kg

NOTE, WIND LOAD

A canopy panel sits in or against a ceiling, so the wind load of a mast luminaire does not apply. The only figure that matters is at a free canopy edge, where the panel on its side presents 36,100 mm². Under a closed canopy there is no wind figure to check.

NOTE, THE DRAWING DEPTHS

The production drawings give 21 mm for the recess panel, 70 mm for the surface luminaire without its bracket and 118 mm for the extended skirt. The datasheet depths of 20, 95 and 185 mm are the figures below the ceiling with the bracket fitted. This manual uses the datasheet depths for the ceiling check.

3.2 The ceiling bracket, surface versions

The surface and surface extended versions hang on the ceiling bracket, drawing DCB_Canopy Light_bracket_20251127: a 380 × 380 mm aluminium plate bent into a hat profile 82 mm high, with four M5 studs at 358 mm centres for the luminaire, a cable hole of Ø 38 mm in the centre, and a field of eighteen Ø 5.2 mm holes for the screws into the ceiling. The luminaire is supplied with the bracket fitted; the cover of the bracket hides the cable joint.

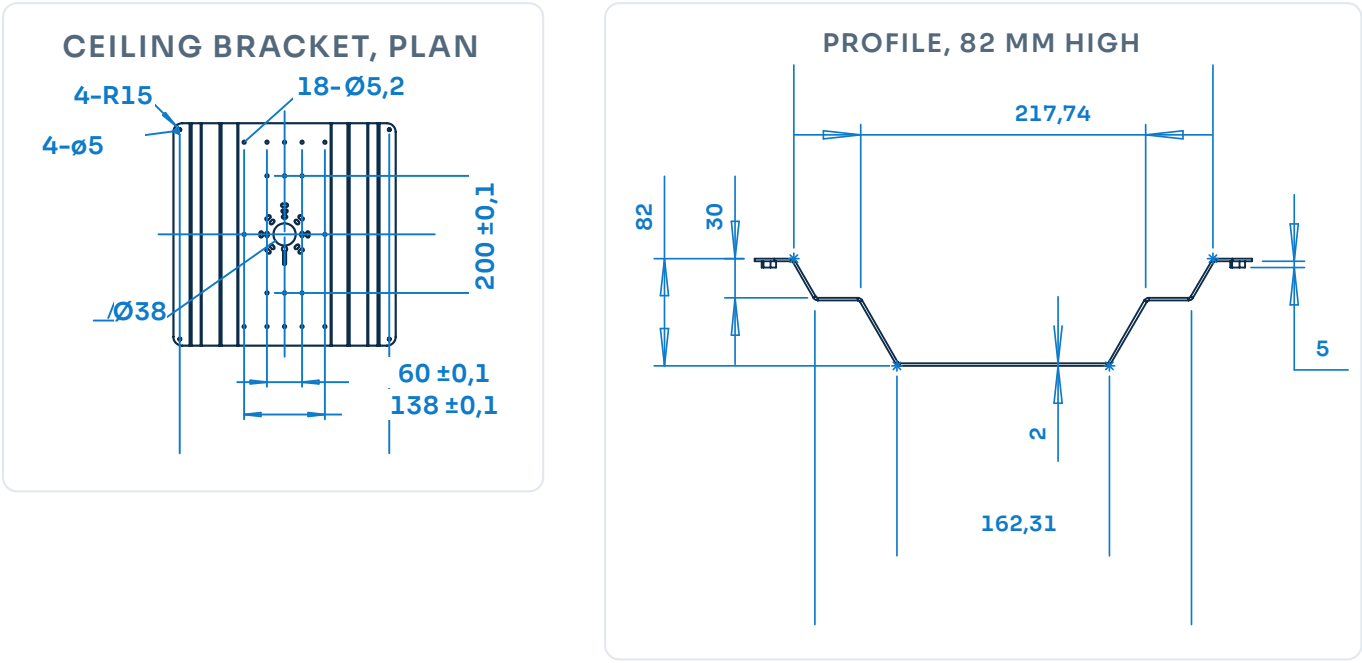

The ceiling bracket in plan, seen from the ceiling side, and its profile. The crown of 162 mm goes against the ceiling, the flanges carry the luminaire on the M5 studs

CEILING BRACKET, TO THE STRUCTURE	
Plate	380 × 380 mm, 2 mm aluminium, hat profile 82 mm high
Crown against the ceiling	162 mm wide, 217.7 mm over the bends
Fixing holes	18 × Ø 5.2 mm on 60, 138, 200 and 315 mm centres, plus 4 × Ø 5 at the corners
Cable hole	Ø 38 mm, central
TO THE LUMINAIRE	
Studs	4 × M5 on 358 × 358 mm, into the four holes of the panel
Torque	M5, 5 Nm, section 6.6



The Manta Surface on its ceiling bracket, upside down on the bench: the cable leaves the panel through the Ø 38 hole in the crown and is joined above the ceiling

NOTE, WHICH HOLES TO USE

The bracket carries more holes than you need, so that it lands on a purlin, a canopy rib or a plate whatever the pitch. Use at least **four screws**, two each side of the cable hole, on the pattern that lands on structure. The corner holes are for a flat plate.

3.3 The high temperature system, and lifetime in the heat

Standard industrial LED luminaires stop at roughly plus 50 degrees Celsius, because the driver does: what fails in the heat is the electrolytic capacitor in the driver. On the **MNHT02 and MNHT01** the driver therefore leaves the panel and the hot zone entirely and is joined to the luminaire with 2.0 m of heat resistant silicone cable as standard, longer on request. The panel is the whole luminaire in the ceiling of an oven or a drying chamber; the only component in the heat is the one that can take it.

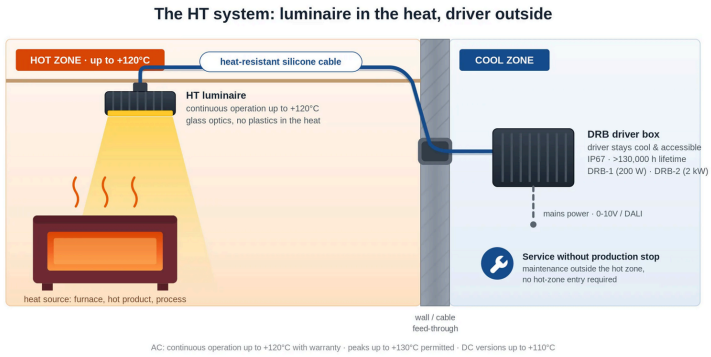

The high temperature system: only the panel is in the heat. The driver sits in the cool zone, in a DRB-1 or on a tray, and it is reachable without entering the hot zone

	MNHT02, recess	MNHT01, surface
Ambient	minus 45 to plus 120 °C, peaks to plus 130	
Supply	90 to 305 VAC at the driver, 50 or 60 Hz	
Driver	Remote BLD120, outside the hot zone, fits the DRB-1	
Cable	SiHF-OB silicone, 4 cores, 2 × 2.5 plus 2 × 0.5 mm², 2.0 m, longer on request	
Flux and power	7,500 lm at 50 W, 150 lm/W	
Optics	120 degrees diffuse. HT optics not possible	
Depth and weight	20 mm, 3.9 kg	95 mm, 4.9 kg

LUMEN MAINTENANCE AT ELEVATED AMBIENT

The headline figure is measured at 50 degrees Celsius. In a hot zone the ambient governs, so use the row that matches the position. This ladder applies to every JEL high temperature luminaire.

Ambient	TM-21 L90B05
plus 50 degrees Celsius	360,000 h
plus 85 degrees Celsius	103,000 h
plus 105 degrees Celsius	71,700 h
plus 120 degrees Celsius	51,400 h

WARNING, THE DRIVER AMBIENT IS PLUS 50 DEGREES CELSIUS

The panel is rated to plus 120 degrees Celsius. **The driver is not.** It must sit in an ambient of at most plus 50 degrees Celsius, outside the hot zone. Mounting it on top of the oven roof, next to the panel it feeds, is the single most common installation error on a high temperature job.

BUILT-IN SELF-PROTECTION

An HT luminaire protects itself. As its internal temperature rises it dims back automatically, and on overheating it switches itself off and comes back when it has cooled.

That feedback is why the HT cable has four cores and not two: two of 2.5 mm² carry the power and two of 0.5 mm² carry the temperature signal between the panel and the driver. Conductors 7, 8, 11 and 12 in section 7.2 are that pair.

DANGER

Never install an MNHT01 or MNHT02 with the temperature pair disconnected, shorted or left out of an extended cable run. Without it the luminaire has no thermal protection and will run itself past its rating in a hot zone.

3.4 Standards and verification

Subject	Standard	By
Luminaire safety	IEC/EN 60598-1, -2-5	In house
EMC emission and immunity	EN 55015, EN 61547	Third party
Ingress	IEC 60529, ISO 20653	In house
Impact	IEC 62262, IK08 with the glass front	In house

Subject	Standard	By
Vibration	IEC 60068-2-6	In house
Shock	IEC 60068-2-27	In house
Corrosion	ISO 9223, class C5	In house
Photometry	IES LM-79, TM-21 for lifetime	In house
Substances	RoHS, REACH	Self-declaration

This table lists how the product is verified. The harmonised standards named on the declaration of conformity are listed separately in section 14.1. Photobiological safety is covered in section 4.3. ISO 20653 is the road vehicle ingress standard, where the IP69K high pressure and steam test comes from; on a forecourt canopy that test is the washdown. No vibration class is stated for the Manta: a canopy panel is not tested to a vibration rating the way a machine luminaire is. To check the authenticity of a test or inspection report and certificate, contact JEL Products on +31 (0)33 785 9809 or at info@jelproducts.nl.

OPTICS AND BEAM ANGLES

The Manta is supplied without optics as standard, which is where the 224 lumens per watt comes from: the diffuse front is the only thing in front of the LED. The optic versions trade a little output for control and are chosen from the lighting calculation. The beam angle is the full angle at 50 per cent of the peak intensity, the field angle at 10 per cent.

Optic	Distribution	Beam angle	Field angle	Typical use
None	Very wide, diffuse	136°	168°	Canopies at 4 to 6 m over a forecourt
30°	Narrow, symmetric	36°	58°	High canopies and truck lanes above 6 m
60°	Wide, symmetric	-	-	A covered lane or a dock
120°	Very wide, symmetric	-	-	Very low canopies and walkways

The 60 and 120 degree optics are specified from the lighting calculation; their measured angles are on the product page as they are published. What matters on a forecourt is the light that leaves sideways past the canopy edge; section 6.7 covers that.



The Manta Recess from below: one glass, one panel, no visible fixings

WHAT EACH RATING MEANS HERE

IP69K	Close range high pressure and steam cleaning. Tested separately from IP68, so **IP69K does not imply IP68**
IK08	The glass front, 5 joules. Glass is chosen for chemical resistance and radiant heat; the panel sits in a ceiling where nothing hits it
Class I and II	The place where the driver sits is earthed. The standard panel carries the driver inside and is Class I: its green and yellow conductor earths the panel. The HT panel is Class II; there the driver box and the tray **are** earthed

4 Safety

This chapter lists the hazards that arise when a Manta is installed, operated and maintained, and what to do about each of them. It does not replace the national and local electrical and working at height regulations that apply on your site, nor the hazardous area drawing of a fuel station.

4.1 Electrical hazard

DANGER, LIVE PARTS

Working in the joint above the ceiling, in the driver compartment or in a driver box while the supply is on can cause death or serious injury. Isolate the supply, secure it, and verify that the circuit is dead. Check twice.

DANGER, MAINS IS IN THE LUMINAIRE ON THE STANDARD VERSION

On MNAC01, MNAC02 and MNAC03 the mains cable is part of the luminaire: the driver sits inside the panel and the four core tail carries 90 to 305 VAC. Treat the Manta as a mains appliance: nobody opens the driver compartment or the joint with the circuit live. See section 7.1.

- The rule is that the place where the driver sits is earthed. The standard Manta has the driver inside and is Class I: the protective earth of the supply is connected to the green and yellow conductor of the panel. The HT version is Class II; there the driver box, the driver tray and any metal enclosure must be earthed correctly.
- Make the connection to the standards and directives that apply in your country, within 90 to 305 VAC, and on a forecourt within the site's hazardous area classification. **Read the label before you connect.**
- Only use the driver and the cable supplied for an HT luminaire. Keep one metre to a radio receiver.

4.2 Falling objects

WARNING, FALLING LUMINAIRE

A panel that comes loose from a canopy falls onto a forecourt with people and vehicles under it. Verify the structure before mounting, use all four screws, and fit a secondary retention wherever the luminaire is above a walkway, a lane or a working area.

The luminaire weighs 3.9 to 5.4 kg. Under EN 60598-1 the suspension has to withstand four times the mass. A panel hangs on four screws into a canopy skin that is often 1 mm of profiled sheet: **the sheet is the weak point, not the screw**. Where the ceiling is not structure, fix to a rib or a backing plate, then fit the retention anyway.

4.3 Optical radiation

WARNING, OPTICAL RADIATION

Never look into the operating light source. Direct exposure at close range can cause permanent eye damage.

Photobiological safety is classified to **EN 62471**, with the blue light hazard assessed to **IEC/TR 62778**. That gives a **hazard distance**: beyond it the luminaire is Risk Group 1 and no exposure limit is reached in normal viewing. **It follows the optic**, because it is set by the peak intensity and not by the light output. The figures below come from our own LM-63 photometric files.

Version	30 degree optic	No optic
Recess, Surface, Surface Extended	**4.0 m**	1.3 m
HT, recess and surface	-	0.8 m

The rule on site. Take **5 m** where a 30 degree optic is fitted and **3 m** for anything else. Nobody works or stands within that distance looking up into the panel. The diffuse Manta without optics is one of the mildest luminaires in the JEL range, which is exactly why it is the one a driver looks up into while the tank fills. Aim or focus with the luminaire switched off.

Method: the square root of the peak intensity divided by the threshold illuminance at the Risk Group 1 boundary, taken as 3,500 lx for the 5700 K LED. The Manta with the 30 degree optic peaks at about 56,500 cd, which gives 4.0 m, rounded up to 5 m for the rule on site. The 60 and 120 degree optics are not yet in the photometric library; take the 30 degree figure for them until they are. Calculated from our own photometric files, not a measurement report.

4.4 Hot surfaces, high temperature range



WARNING, HOT SURFACE

A Manta HT in a hot zone reaches the temperature of its surroundings, up to plus 120 degrees Celsius. Touching it causes immediate and severe burns. It stays hot long after the supply is switched off.

- Isolate the supply and let the panel cool to hand temperature before any work. Do not judge the temperature by looking at it. Nobody touches it without the zone being cooled and released.
- Wear heat resistant gloves and the personal protective equipment required for that zone.
- Never run cold water onto hot glass. The thermal shock can break the front. See section 10.5.
- Do not apply water at all to a luminaire warmer than plus 60 degrees Celsius.
- The silicone cable is rated for the hot zone but it also gets hot. Treat the cable as a hot surface up to the point where it leaves the zone.
- The driver case of an HT version may reach plus 90 degrees Celsius in service, in an ambient of at most plus 50. Let it cool before you open the box.
- A standard Manta also runs warm, and it has its driver inside: the panel and the fins are the driver's heat sink. Let it cool before handling.

4.5 Crush and handling

CAUTION, A PANEL ABOVE YOUR HEAD

A 380 mm panel of up to 5.4 kg is offered up to a ceiling at arm's length and held there while the first screws go in. Two people, every time: one holds, one fixes. A panel that slips comes down glass first, onto the person under it.

- Wear gloves, safety boots and a hard hat during assembly and installation.
- Do not work alone at height. Use rated and secured ladders, lifts or scaffolding, and on a forecourt close the lane under the position.

4.6 Heat and surroundings

- Keep at least 75 mm of free air above the heatsink of a recessed panel and around the fins of a surface panel, and 150 mm around a driver box. Do not pack the canopy void above a recessed panel with insulation.
- Keep the fins clear. On a forecourt canopy they collect exhaust film and dust from above; trapped dirt reduces cooling and shortens the life of the LEDs and of the driver inside. The Manta has no fan and no vents.
- Do not install a standard Manta where the ceiling takes it beyond plus 50 degrees Celsius ambient: above an oven, in a drying room, under a dark canopy skin in full sun without ventilation. For process heat use the HT version.
- Do not expose the luminaire to corrosive chemicals outside its corrosion class without checking with your supplier first. There is no 316L Manta; for a washdown area with process chemistry the borosilicate front is the option, not a different housing.

4.7 Laying the luminaire down

CAUTION

Rest the panel on its **back**, on the fins or on the bracket, on the packaging or on a clean soft surface. **Never rest it on its glass.**

On the Manta the glass front is the whole underside of the luminaire and it is the part that seals the panel. Put it down on grit with the glass underneath and the glass takes the load on two points. It may not break, but a scratch in a diffuse front shows in the light, and a chipped edge is a leak path that does not show until the first washdown. The fins and the bracket carry the weight without complaint.

NOTE

Keep the free ends of the tail capped and dry until they are terminated. A tail that has stood in a puddle carries water into the panel by capillary action, and that shows up months later as a driver fault.

4.8 What must never be done

DANGER, DO NOT OPEN THE HOUSING

Do not remove the glass, and do not open the panel beyond the driver compartment cover on the rear. The seal, the ingress protection and the electrical safety all depend on a panel that has not been opened. The driver compartment is the only part of the luminaire that is designed to be opened, and only with the circuit dead. Opening anything else voids the warranty and the declaration of conformity.

- Do not modify, repair or open the luminaire. Repairs are carried out by JEL Products or by a company it appoints.
- Do not install or switch on a luminaire with a cracked glass, a damaged panel, seal, bracket or cable, and do not use it in the applications listed in section 2.3.
- Do not connect mains to the tail of an HT luminaire, and do not put a luminaire on a supply outside 90 to 305 VAC.
- Do not disconnect, short or omit the temperature pair on an HT version. See section 3.3.
- Do not hang the panel on fewer than four screws, and do not put the driver of a high temperature installation inside the hot zone.
- Do not box in the heatsink of a recessed panel or pack the void above it.

4.9 Emergency and exceptional situations

- If an electrical fault occurs in a luminaire, a driver or a driver box, switch off the supply immediately.
- If a luminaire is severely damaged during operation, by a vehicle, a mast or a load, switch off the supply immediately and do not switch it on again until the luminaire has been replaced or released by JEL Products.
- No Manta has battery back up. None of them provides emergency or escape route lighting.

4.10 Potential health consequences

If ignored	Consequence
Working in a live joint, compartment or box	Severe injury or death by electric shock
Mains connected to an HT tail	Destroyed luminaire, arc, fire and shock risk
Looking into the operating light source	Permanent eye damage, at close range with a 30 degree optic
Touching a hot HT panel or its cable	Immediate severe burns
Fewer than four screws, or no retention above a lane	Injury from a falling panel of up to 5.4 kg
Panel held by one person at arm's length	Dropped panel, glass fragments, injury below
Cold water on hot glass	Broken front, glass fragments, loss of ingress protection
Panel rested on its glass	Chipped glass, water ingress, later failure
Temperature pair disconnected on an HT	No thermal protection, LED and driver run past their rating
Heatsink boxed in above the ceiling	Thermal foldback, then early driver failure inside a sealed panel

NEVER, ON ANY MANTA



Never open the housing beyond the driver compartment



Never rest the panel on its glass



Never carry or hang the panel by the cable



Never aim a pressure washer at the seal or the cable entry



Never cover the heatsink or box it in



Never fit a driver other than the one supplied

5 Preparation

Everything that has to be right before the first hole goes into the canopy.

5.1 Transport and storage

- Transport and store the luminaire in its original packaging, in a dry place, at **minus 45 to plus 50 degrees Celsius**. That applies to the high temperature range too: the rating of plus 120 degrees Celsius is an operating rating, not a storage rating.
- Do not stack pallets beyond the marking on the packaging.
- Store the box flat, glass up, and never stand a panel on its edge against a wall.
- On a high temperature version the silicone cable is coiled in the box. Keep it coiled until the run is measured out. Silicone insulation is softer than PVC and picks up damage from being dragged.

5.2 Contents of the delivery

1 ×	Manta luminaire in the ordered configuration, with its tail: 0.3 m H07BQ-F on the standard versions, 2.0 m SiHF-OB silicone on the HT versions, free ends
1 ×	Ceiling bracket, fitted, on MNAC01, MNAC03 and MNHT01. The recess versions have no bracket: the panel rim is the fixing
1 ×	Remote BLD120 driver on MNHT01 and MNHT02. Bare, or in a DRB-1 driver box if ordered
1 ×	This instruction manual

> **NOTE, THE JOINT ABOVE THE CEILING IS YOURS**
>
> The standard Manta is delivered with a 0.3 m tail and no junction box. The joint between the tail and the site cable is made in an IP67 box above the ceiling or inside the ceiling bracket, and that box is part of the installation, not of the delivery. Check the packing list.

Screws into the canopy are not supplied, because they depend on the canopy. **The safety cable is not supplied as standard**, see section 6.5.

5.3 Unpacking

1. Read the label on the box and check that the article code matches what you ordered and what the lighting design specifies. Recess and surface panels, optics and colour temperatures differ between positions on the same canopy.
2. Cut the tape along the seams. Do not push the knife deeper than the tape.
3. Lift the panel out by the rim or the bracket, never by the tail, and put it down on its back.
4. Check that the article code on the type label matches the code on the box, note the internal production code as well, see section 2.5, and **read the supply type on the label**.
5. Inspect the glass, the panel, the seal, the bracket and the tail for cracks, impact damage or a wet cable end.
6. Keep the packaging until the luminaire is installed and working. A luminaire that has to be returned travels in its own box.

> **WARNING, DAMAGED PRODUCT**
>
> If you find any damage, do not install the luminaire and do not switch it on. Contact JEL Products.

5.4 Tools

The list names the screw and not a bit size, because the screw into the canopy is your choice: bring the driver bit or spanner that fits the M4, M5 or self drilling screw you have chosen for the skin or the rib.

Tool	Used for
Jigsaw or nibbler, and a template	The 270 × 270 mm cut-out for a recess panel, section 6.1
Hole saw, 36 to 38 mm	The cable hole through the ceiling for a surface panel
Drill, 3.3, 4.2 or 5.5 mm	M4 tapped holes for the recess rim, M5 for the bracket, or clearance holes for machine screws
Driver bit or spanner for the ceiling screws	Four per luminaire, into the skin, a rib or a backing plate
Socket or spanner, 8 mm	The M5 nuts on the bracket studs
Hex key for the compartment cover	The screws of the driver compartment cover, where the connection is made inside
Torque screwdriver, 1 to 10 Nm	Rim screws 3 Nm, stud nuts 5 Nm, cover screws 3 Nm, glands 2.5 Nm, section 6.6
Two open ended spanners for a cable gland	The glands of the junction box or the driver box
Wire stripper and cutter, end sleeve crimping tool	Preparing the tail and the site cable for the terminals
Voltage tester	Verifying that the circuit is dead before a cover comes off
Insulation resistance tester	Commissioning, chapter 8
Heat gun	Heat shrink tubing over a gland on an HT version, section 7.5
Heat resistant gloves	Any work in a hot zone on the HT range

Do not use a percussion drill in the canopy skin with a panel already hanging next to it; the skin drums and the glass next door takes the vibration.

NOT SUPPLIED WITH THE LUMINAIRE

Site cable	Sized from section 7.6, to the joint above the ceiling on the standard versions or to the driver on HT
Junction box	An IP67 box above the ceiling or inside the bracket where the 0.3 m tail meets the site cable, section 7.1
Screws into the canopy	Four per luminaire, A4 or A2 stainless steel, suited to the skin, the rib or the plate
Backing plate	Where the canopy skin is thin sheet, a plate or a rib behind the four screws
Safety cable	Ordered separately, see section 6.5
Heat shrink tubing and self amalgamating tape	For sealing a gland on an HT version, section 7.5
IP67 junction box for a bare HT driver	Where the driver is not in a DRB-1, section 7.4

NOTE

The reason the tool list names a screw and not a bit size is that the screw into the canopy is your choice, not ours. A steel canopy rib, an aluminium composite skin, a concrete soffit and an existing CREE 304 frame each ask for a different fixing, and the recess rim and the bracket accept them all.

TWO PEOPLE, ALWAYS

A Manta is fitted overhead. One person holds the panel against the ceiling while the other starts the screws, and on a forecourt the lane under the position is closed. Nobody does that alone from a ladder.

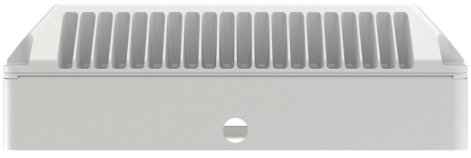

The Manta Surface as delivered: panel, ceiling bracket and the tail

6 Mechanical mounting

A recessed Manta hangs on its rim in a cut-out; a surface Manta hangs on its ceiling bracket. In both cases: prepare the ceiling first, make the cable joint above it, then hang the panel, then close. The procedure is the same for the standard and the high temperature versions; only the cable and the driver position differ.

DANGER

Isolate the supply and secure it against being switched on again before you start. Installation may only be carried out by a qualified person, and overhead by two of them.

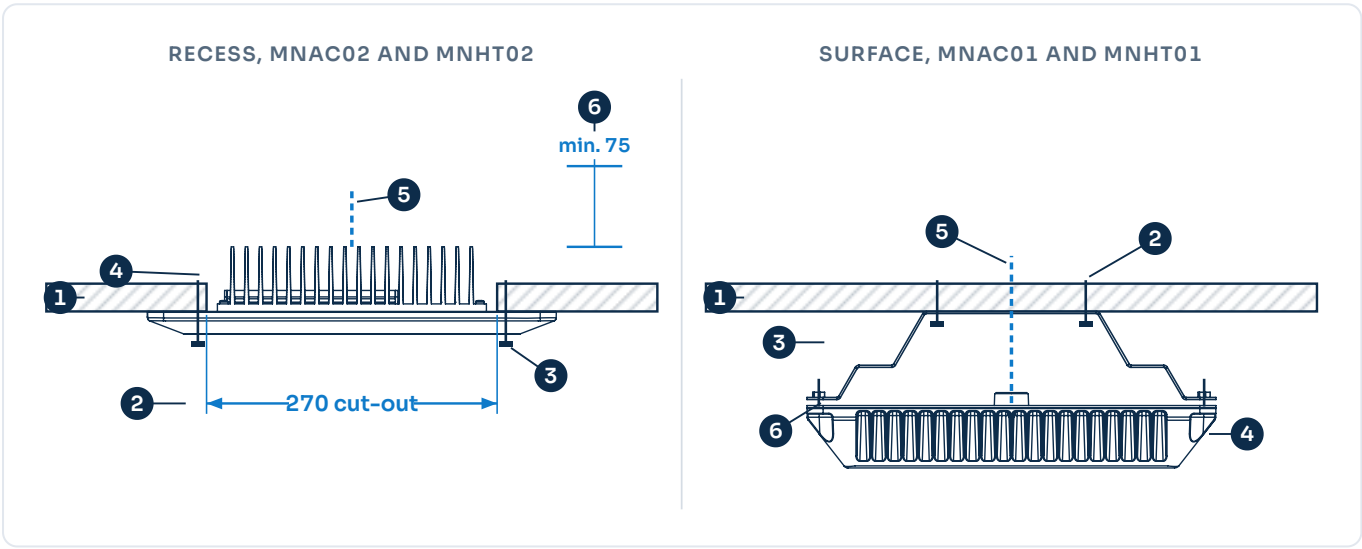

Mounting principle. Left the recess version, right the surface version, both to scale from the production drawings. The panel is 380 mm wide in both cases

RECESS

1	The canopy ceiling: skin, rib or plate, with a backing plate behind thin sheet
2	Cut-out 270 × 270 mm, corner radius 10, for the heatsink
3	Four M4 screws through the panel rim on a 286 × 286 mm pattern, 3 Nm
4	The panel rim, 380 mm, flush against the ceiling on its seal
5	The tail leaves the top of the heatsink to the joint above the ceiling
6	Minimum **75 mm** free air above the fins. No fan, no vents, no insulation on top

SURFACE

1	The ceiling, verified in the same way
2	At least four screws through the crown of the bracket into the ceiling, on the pattern that lands on structure
3	The ceiling bracket, hat profile 82 mm high, crown against the ceiling
4	The luminaire on the four M5 studs of the bracket, nuts at 5 Nm, 95 mm below the ceiling in total
5	The tail through the Ø 38 hole in the crown and the Ø 36 hole in the ceiling, to the joint above it
6	The M5 studs on 358 × 358 mm, through the four holes in the panel rim

BEFORE YOU GO UP

- The lighting design is on site, with position, version and optic per luminaire, and the wiring route above the canopy.
- The ceiling is flat over the whole 380 mm and carries four times the weight; a panel on a corrugated skin without a plate does not seal.
- Screws are A4 or A2 stainless steel. The joint above the ceiling is decided: an IP67 box, reachable for service, or inside the bracket.
- HT range: the driver position outside the hot zone is chosen and reachable, section 7.4.

6.1 Recess, MNAC02 and MNHT02

1. **Check the position.** Follow the lighting design. Check that the ceiling is flat over 380 × 380 mm, that nothing runs through the void behind the cut-out, and that the structure carries the load.
2. **Mark the cut-out and the holes** from a template: 270 × 270 mm, corner radius 10, centred, and four fixing holes on a 286 × 286 mm pattern for M4, at 45 degrees on the diagonals of the cut-out.
3. **Cut the opening** with a jigsaw or a nibbler and deburr it. A sharp edge cuts the tail on the way through. Drill and tap the four holes for M4, or drill clearance holes for M4 machine screws with a backing plate behind thin sheet.
4. **On an HT version, mount the driver first,** outside the hot zone, in an ambient of at most plus 50 degrees Celsius, section 7.4.
5. **Make the joint above the ceiling** per chapter 7, in an IP67 box that stays reachable, and leave enough tail to lower the panel 300 mm for service.
6. **Offer the panel up, two people:** tail first through the cut-out, heatsink into the opening, rim flat against the ceiling with the seal all the way round.
7. **Fit the four M4 screws** and tighten to **3 Nm** in a cross pattern, so the seal compresses evenly. Do not overtighten: the screw goes through a cast rim.
8. **Check the seal** all the way round from below. No daylight, no gap.
9. **Fit the secondary retention** if section 6.5 applies, to the structure above.

> **NOTE, THE VOID ABOVE THE PANEL**
>
> The heatsink stands 60 mm above the ceiling and needs 75 mm of free air above that. A canopy void full of insulation, a duct or a cable tray directly above the cut-out takes that air away, and the panel folds back its output to protect itself. Look into the void before you cut.



The recess panel from above: the heatsink that goes through the cut-out, and the rim that carries the four screws

RECESS, PER LUMINAIRE

	MNAC02 and MNHT02
Cut-out	270 × 270 mm, R10
Fixing holes	4 × M4 on 286 × 286 mm
Torque	3 Nm, cross pattern
Above the ceiling	60 mm heatsink plus 75 mm free air
Weight to hold	3.9 kg, overhead

AFTER MOUNTING, BEFORE CLOSING

- [ ] Four rim screws at 3 Nm, seal compressed evenly, no gap from below.
- [ ] Tail not pinched in the cut-out, drip loop above the ceiling.
- [ ] Joint closed in its IP67 box, reachable.
- [ ] Secondary retention fitted where required.
- [ ] Nothing within 75 mm above the fins.
- [ ] HT only: the driver sits outside the hot zone.

6.2 Surface, MNAC01 and MNHT01

1. **Check the position.** Follow the lighting design. Check that the ceiling is flat over the crown of the bracket and that a rib, a purlin or a plate lands under at least four of the bracket holes.
2. **Take the bracket off the luminaire:** four M5 nuts on the studs. Keep the nuts.
3. **Mark the holes from the bracket,** the four that land on structure, and the cable hole of Ø 36 in the centre. Drill the cable hole with a hole saw and deburr it, and drill the fixing holes for the screw you have chosen.
4. **Feed the site cable** through the ceiling hole and the Ø 38 hole in the crown, and fix the bracket with at least four screws, A4 or A2 stainless steel, torque per the screw and the substrate, section 6.6.
5. **On an HT version, mount the driver first,** outside the hot zone, section 7.4.
6. **Make the joint** per chapter 7, inside the bracket or in an IP67 box above the ceiling, and leave enough slack to lower the panel 300 mm for service.
7. **Offer the panel up, two people,** onto the four M5 studs, and fit the four nuts with a washer each, **5 Nm** in a cross pattern.
8. **Check** that the panel sits flat on the flanges all the way round and that the tail is not pinched between the panel and the bracket.
9. **Fit the secondary retention** if section 6.5 applies.

> **WARNING, FOUR SCREWS INTO STRUCTURE**
>
> The bracket offers eighteen holes. The four you use go into a rib, a purlin or a backing plate, not into 1 mm of skin. On a forecourt canopy that skin is what a sheet screw pulls out of in the first storm.

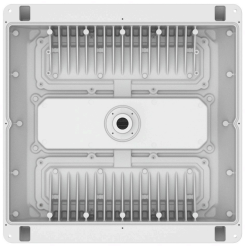

The Manta Surface with its bracket from above: the crown with the cable hole and the field of fixing holes

SURFACE, PER LUMINAIRE

	MNAC01 and MNHT01
Bracket to the ceiling	At least 4 screws through Ø 5.2 holes
Cable hole	Ø 36 in the ceiling, Ø 38 in the crown
Luminaire to the bracket	4 × M5 studs on 358 mm, 5 Nm
Below the ceiling	95 mm
Weight to hold	4.9 kg, overhead

AFTER MOUNTING, BEFORE CLOSING

- [ ] Bracket screws into structure, torqued and marked.
- [ ] Four stud nuts at 5 Nm, panel flat on the flanges.
- [ ] Tail through the crown hole, not pinched, joint closed and reachable.
- [ ] Secondary retention fitted where required.
- [ ] Fins clear, nothing built against the bracket.
- [ ] HT only: the driver sits outside the hot zone.

6.3 Surface Extended and the CREE 304 retrofit, MNAC03

The Surface Extended is the surface panel with a 118 mm skirt, 185 mm below the ceiling on its bracket. It exists for one reason: it drops into the opening left by an existing CREE 304 canopy luminaire, so a forecourt is converted without cutting or patching the canopy.

1. **Isolate and remove the old luminaire,** and take its frame out if it is not part of the canopy. Photograph the old wiring before you disconnect it.
2. **Check the opening.** The skirt sits in the opening; the bracket lands on the ceiling around it. Where the old frame stays, check that the four bracket screws land on the frame and not on the old luminaire's cut-out.
3. **Choose the cable entry.** Through the ceiling and the crown as in section 6.2, or through the Ø 20 mm hole in the side of the skirt where the old cable arrives from the side. Fit an M20 gland in the skirt entry; blank the one you do not use.
4. **Mount the bracket and the panel** exactly as in section 6.2.

> **NOTE**
> The old CREE 304 luminaire was a mains luminaire with its own driver, so the supply at the position is mains and the Manta takes it directly. Check the circuit is 90 to 305 VAC and that the old dimming or photocell wiring is identified before you reuse it.



The Surface Extended from the side: the skirt that fills the existing opening

6.4 Mounting attitude and position

Attitude	Glass down, in or against a horizontal ceiling. That is the attitude the photometry assumes and the reason the ULOR is nil by construction
Sloping ceilings	Up to fifteen degrees from horizontal without a change to the photometry. Beyond that, have the spill past the canopy edge checked, section 6.7
Clearance	At least 75 mm above the heatsink of a recessed panel, and around the fins of a surface panel. Do not pack the void
Driver box clearance	At least 150 mm around a DRB-1 on an HT installation
Canopy edge	Keep the panel at least one panel width in from a free edge where a lighting design has not placed it, so the spill stays under the canopy
Joint above the ceiling	Reachable without taking the panel down, or with the panel lowered 300 mm on its tail slack
Wash down zones	The panel is IP69K and may sit in the wash down zone. **A driver box may not**: put it outside
Hot zones	Only the high temperature versions go in a hot ceiling. Only the panel does; the driver stays outside
Cold	The standard versions run to minus 45 degrees Celsius. Keep the tail ends capped until the joint is made, so no frost forms on the conductors

6.5 Secondary retention

WARNING

Fit a secondary retention wherever the luminaire is mounted above a lane, a walkway or a working area, and always where the canopy skin rather than a rib carries the screws. A forecourt has both: people and vehicles under every panel, and a thin skin over most of them.

NOTE, THE SAFETY CABLE IS AN ORDERED ITEM

The safety cable is **not supplied as standard**. It is supplied with the luminaire when it is ordered, and it is rated for the weight of the luminaire it is supplied for. State the version when you order it.

Length	1 m
Rating	Matched to the weight of the luminaire it is supplied for
Anchor	To the structure above the ceiling, independent of the four screws, not to the tail and not to the skin
Supply	Ordered separately, never as standard

1. Choose an anchor point in the structure above the ceiling, a rib or a purlin, that carries four times the mass of the luminaire and is independent of the four screws. Pick it before you cut.
2. Loop the cable around that anchor and attach the other end to the bracket, or to the heatsink of a recessed panel, not to the tail.
3. Leave a little slack, enough to lower the panel for service but not so much that it can gather speed if the fixings fail.
4. Record the safety cable in the site documentation, so that it is inspected at every maintenance visit.

DANGER

Do not substitute a cable, chain or strap of your own without having it rated. A longer cable turns a drop into a swing, and a 5 kg panel swinging under a canopy at head height hits whoever is at the pump.

6.6 Tightening torques

Use a torque screwdriver. The rim screws go into a cast rim and the stud nuts sit on a 2 mm bracket: overtightening strips the one and dishes the other, and both leak.

Connection	Size	Torque
Rim screws, recess panel	M4	3 Nm
Stud nuts, surface panel to bracket	M5	5 Nm
Driver compartment cover	M4	3 Nm
Cable gland cap nut, box or skirt	M20	2.5 Nm, and dimension L in section 7.5
Bracket screws into a steel rib, class 8.8	M5	5 Nm
Bracket screws into a steel rib, class 8.8	M6	8 Nm

Torques apply to clean, dry, undamaged threads. For a stainless screw in a stainless thread use an anti-seize compound and reduce the torque accordingly. A self drilling screw into sheet or a plug into concrete follows its own manufacturer's figure, which takes precedence.

6.7 Spill light past the canopy edge

A ceiling luminaire has no tilt to set, so the upward light output ratio is nil by construction. What matters on a forecourt is the light that leaves sideways past the canopy edge and reaches the carriageway or the housing behind it. Two things decide that: **the distance of the panel from the edge**, and **the optic**. A diffuse panel at 136 degrees, within one panel width of the edge, lights the road; the same panel one width further in, or with the 30 degree optic, does not.

Where the site borders houses or a protected zone, the assessment against NEN-EN 12464-2 and the NSVV guidance on obtrusive light is made on the lighting design, and the open areas around the canopy are the DarkLicht D or WP, which have a cut-off. Where the design is not available, keep every panel one width in from a free edge and have the result verified.

7 Electrical installation

DANGER, LIVE PARTS

Isolate the supply, secure it against being switched on again, and verify that the circuit is dead before a box or a compartment cover comes off. Only a qualified person may make the electrical connection.

7.1 Architecture, the standard versions

On MNAC01, MNAC02 and MNAC03 the driver sits **inside the panel**. There is no driver box, no external driver and no low voltage link: mains goes into the luminaire on the four core tail, 0.3 m of H07BQ-F with two cores of 1.5 mm² for the supply and two of 0.5 mm² for the dimming signal, and the joint with the site cable is made above the ceiling.

Core	Colour	Function
L	Brown, 1.5 mm²	Phase, 90 to 305 VAC
N	Blue, 1.5 mm²	Neutral, or the second phase on a two phase supply
DIM +	Grey, 0.5 mm²	0 to 10 V, PWM or DALI-2 control, section 9.2. Insulated and capped on a luminaire ordered without dimming
DIM -	Grey, 0.5 mm²	Control return, or the second DALI conductor

1. Fix an IP67 junction box above the ceiling, within reach of the 0.3 m tail and reachable for service, or use the space inside the ceiling bracket on a surface panel.
2. Strip the site cable and the tail to suit the glands and the terminals, fit end sleeves, and feed both through their glands.
3. Land the conductors, one per terminal: L to L, N to N, and the earth of the site cable on the green and yellow conductor of the panel, carried through where the circuit continues to the next panel. The panel is Class I: the driver is inside, so the panel is earthed.
4. Land the dimming pair on the control circuit, or cap it. Keep it away from the mains terminals in the box.
5. Tighten the glands to **2.5 Nm** and to dimension L in section 7.5, and pull on the cables to confirm. Close the box.

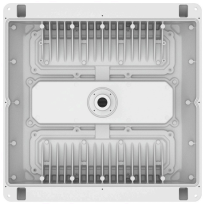

The rear of the surface panel: the driver compartment cover in the centre. The tail leaves next to it

WARNING, THE DRIVER IS MATCHED TO THE PANEL

The BLD120 inside the panel is programmed to that luminaire. It is not a field part. A driver fault on a standard Manta is a luminaire exchange, see chapter 12.

NOTE, A PANEL WITH AN IN GLAND INSTEAD OF A TAIL

A Manta can also be supplied with the connection **inside the driver compartment**, as in the 2026 DCbright manual: the site cable enters through the IN gland in the compartment and lands on connector 1, L, N and earth, with the temperature sensor already wired. On such a panel, open the compartment cover, make the connection inside, tighten the gland to 2.5 Nm and close the cover at 3 Nm with the gasket clean and seated. Never disconnect the sensor.

Every luminaire on a circuit is its own mains load. Linking through the joint passes the **mains** to the next panel; it never passes driver output.

7.2 Architecture and conductors, the high temperature versions

On MNHT01 and MNHT02 the driver sits outside the luminaire and outside the hot zone. Mains arrives at connector 1 in the driver box, the driver feeds connector 2, and cable 2, which on the Manta HT is the 2.0 m silicone tail, carries the driver output and the temperature signal to the panel.

ONE DIAGRAM FOR EVERY AC VERSION IN THE RANGE

The diagram below is the same diagram as in the other JEL floodlight manuals: the conductor count, the colours, the connectors and the terminal numbering are shared across the range. On the Manta HT the driver is the **BLD120**, and cable 2 is SiHF-OB silicone with two cores of 2.5 mm² for power and two of 0.5 mm² for the temperature signal. Connector 3 is inside the panel and is not accessible.

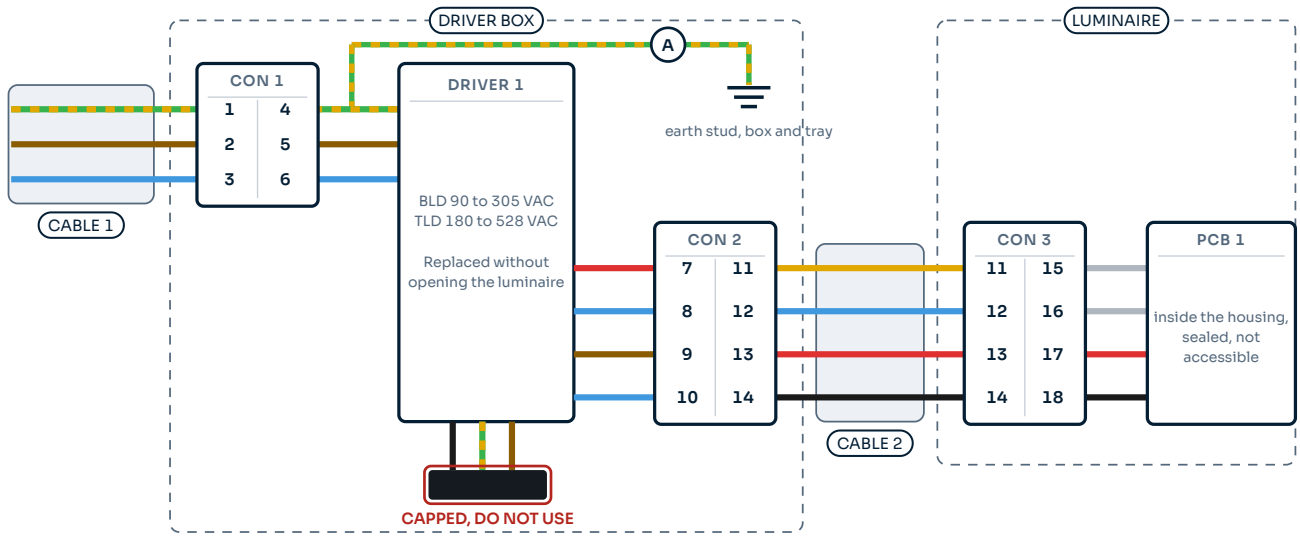

CABLE 1, mains	1 green and yellow earth · 2 brown phase · 3 blue phase or neutral. Mains voltage
DRIVER to CON 2	7 red TEMP + · 8 blue TEMP − · 9 brown DRI OUT + · 10 blue DRI OUT −
CABLE 2	11 yellow TEMP + · 12 blue TEMP − · 13 red DRI OUT + · 14 black DRI OUT −. No mains, no earth
CON 3 to PCB 1	15 grey · 16 grey · 17 red DRI OUT + · 18 black DRI OUT −
A	The incoming earth conductor lands on the earth stud of the driver box, and earths the box and the tray. The luminaire is Class II and is not earthed
CAPPED	**The black, green and brown conductors on the driver are capped off and are not connected. Do not use them**

Every conductor, colour and terminal number as on the production drawing. Cable 1 carries mains, cable 2 the driver output and the temperature feedback

DANGER, THE CAPPED CONDUCTORS ARE NOT SPARE WIRES

The driver leaves the factory with **three capped conductors: black, green and brown**, part of the driver control lead and **not connected on purpose**. Leave the cap in place and do not use them as an earth, a neutral or a spare core. Adding dimming later is a driver change, done by JEL Products or by a qualified person with the driver documentation.

The incoming **earth conductor lands on the earth stud of the driver box**, marked **A**, and earths the box and the tray. Cable 2 carries no protective earth and the luminaire itself is not earthed: the driver sits outside the housing, so the luminaire is Class II.

This diagram applies to models from 2025 onward. For an older luminaire, check the connection against the diagram supplied with it before you rewire anything.

CONDUCTORS, MNHT01 AND MNHT02

No	Colour	From, to	Function
1	Green and yellow	Incoming cable to CON 1	Earth
2	Brown	Incoming cable to CON 1	Phase
3	Blue	Incoming cable to CON 1	Phase or neutral
4	Green and yellow	CON 1 to driver 1	Earth
5	Brown	CON 1 to driver 1	Phase
6	Blue	CON 1 to driver 1	Phase or neutral
7	Red	Driver 1 to CON 2	Temperature, plus, NTC plus
8	Blue	Driver 1 to CON 2	Temperature, minus, NTC minus
9	Brown	Driver 1 to CON 2	Driver output, plus
10	Blue	Driver 1 to CON 2	Driver output, minus
11	Yellow	CON 2 to CON 3, the tail	Temperature, plus, 0.5 mm²
12	Blue	CON 2 to CON 3, the tail	Temperature, minus, 0.5 mm²
13	Red	CON 2 to CON 3, the tail	Driver output, plus, 2.5 mm²
14	Black	CON 2 to CON 3, the tail	Driver output, minus, 2.5 mm²
15	Grey	CON 3 to PCB	Dimming signal, plus
16	Grey	CON 3 to PCB	Dimming signal, minus
17	Red	CON 3 to PCB	Driver output, plus
18	Black	CON 3 to PCB	Driver output, minus

WARNING, CONDUCTORS 7 AND 8 ARE THE TEMPERATURE PAIR

Conductors 7 and 8, red and blue, carry the temperature signal from the panel to the driver. **Grey is the dimming pair, conductors 15 and 16, and nothing else.** An installation that treats 7 and 8 as a dimming input leaves the thermal protection disconnected.

Connector 3 and the board are inside the sealed panel. Rows 15 to 18 are listed so that the numbering matches the other JEL manuals and the production drawing; nothing in those rows is touched on site.

7.3 Circuit breakers

Maximum number of luminaires on one miniature circuit breaker, the manufacturer figure for the BLD120 on an ABB S200 at 220 V. It applies to the standard versions with the driver inside and to the HT versions with the driver outside alike, because the driver is the same.

Driver	B16	C16	C25	D16
BLD120, every Manta	5	8	13	17

It is the **inrush** that limits the count on this driver, not the running current: the BLD120 peaks at 66.8 A with a T50 of 350 microseconds, while the luminaire draws at most 0.45 A at 220 V. On a canopy with twelve panels on one circuit that is a C25 or two breakers, not one B16. A guide for the engineering phase, not a substitute for the installation calculation.

NOTE

Where a residual current device is fitted, the combined leakage current of the circuit decides the count. One Manta draws at most 0.7 mA.

CANOPY CIRCUITS

Every panel is its own mains load, so a canopy circuit is a parallel group. Link the mains through the joint of each panel or feed each panel from a distribution box on the canopy; the MCB count applies per panel either way.

7.4 The high temperature system

Standard industrial LED luminaires stop at roughly plus 50 degrees Celsius, because the driver does. In virtually every failure of LED lighting in heat, the driver gives up first. The HT range is therefore a system in two parts: the panel in the hot ceiling and the driver outside it. On the Manta that split is what separates the HT from the standard version, which carries its driver inside. The system diagram is in section 3.3.

What this means on site

1. **Choose the driver position first, not last.** Outside the hot zone, within minus 40 to plus 50 degrees Celsius ambient, and reachable. On an oven roof that means off the roof, on a wall or a tray in the cool zone. Everything else follows from that choice.
2. **Measure the run against what you were sent.** The silicone cable is 2.0 m as standard, longer per order; confirm the length on the packing list. The cable goes to roughly 150 m, but the cross section has to follow, section 7.6.
3. **Use only the silicone cable supplied,** and keep it off hot surfaces. SiHF-OB is rated for the ambient in the hot zone, not for contact with an oven wall, and an H07BQ-F cable is not rated for either. Route it clear and support it.
4. **Connect all four cores.** Two carry the power, two of 0.5 mm² carry the temperature signal. Without the thin pair the panel has no thermal protection, see section 3.3.
5. **A bare driver goes in an IP67 junction box.** The BLD120 has flying leads. Where the driver is not in a DRB-1, both the mains connection and the luminaire connection are made inside an IP67 box, so that water cannot track along the cable into the driver.
6. **Earth the driver box and the tray.** The HT panel itself is Class II and is not earthed.

> **DANGER**
> Never install the driver in the hot zone, in a duct that passes through it, on top of the oven roof, or above a heat source where convection carries the heat up to it. A driver failure in a hot zone is a fire risk as well as a light failure.

THE MANTA HT SYSTEM

Panel ambient	minus 45 to plus 120 °C, peaks to plus 130
Driver ambient	minus 40 to plus 50 °C, outside the hot zone
Cable	SiHF-OB silicone, 4 cores, 2 × 2.5 plus 2 × 0.5 mm², 2.0 m, to roughly 150 m on request
Driver	BLD120, 161 × 68 × 33.5 mm, 800 g, 90 to 305 VAC or 127 to 420 VDC
Driver box	**DRB-1**, one driver up to 320 W, 276 × 194 × 86.5 mm, 4.2 kg, IP66 and IP67. Or bare in an IP67 box
Front	Diffuse chemically hardened glass, or diffuse borosilicate where the glass sees radiant heat
Optics	120 degrees diffuse, no HT optic
Self-protection	Dims back on rising internal temperature, switches off on overheating



Manta HT Surface, Titanium Grey, with the silicone cable leaving the panel

Above plus 130 degrees Celsius, or where the thermal load is not known, JEL Products calculates the load per position and designs the system, including the driver location and the cable route.

7.5 Cable glands

On a panel with a tail the glands you meet are in the junction box above the ceiling, in the skirt of a Surface Extended, or in the driver box of an HT installation. On a panel with a driver compartment, the IN gland in the compartment is an M20 × 1.5 as well. Tighten the cap nut to 2.5 Nm and to the dimension in the table, measured over the gland. That is a more reliable instruction on a ladder than a torque figure alone. On the HT range then apply heat shrink tubing and self amalgamating tape over the gland. Dimension L runs from the face of the box to the end of the cap nut, with the cable fitted; it is not the thread length.

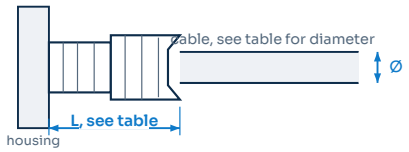

Where dimension L is measured

Cable	M12×1.5 -D-SI 4 to 8	M20×1.5 -2H 4 to 8	M20×1.5 -H 5 to 10	M20×1.5 6 to 12	M20×1.5 -D 8 to 14
H07BQ-F 4G0.5 mm², Ø 6.7 mm	17.7 mm	19.8 mm	n/a	n/a	n/a
H07BQ-F 2G2 mm², Ø 7.3 mm	18.4 mm	19.9 mm	n/a	n/a	n/a
H07BQ-F 2G1.5 + 2G0.5 mm², Ø 8 mm	18.9 mm	20.0 mm	**20.4 mm**	n/a	n/a
H07BQ-F 4G1.5 + 2G0.5 mm², Ø 10.4 mm	n/a	n/a	21.3 mm	22.2 mm	n/a
H07BQ-F 2G2.5 + 2G0.5 mm², Ø 9.5 mm	n/a	n/a	21.1 mm	n/a	n/a
H07BQ-F 4G2.5 + 2G0.5 mm², Ø 12.3 mm	n/a	n/a	n/a	n/a	21.0 mm
SiHF-08 2×1 mm², Ø 7.9 mm	18.9 mm	20.0 mm	n/a	n/a	n/a
SiHF-08 2×2.5 + 2×0.5 mm², Ø 10.7 mm	n/a	n/a	**21.3 mm**	n/a	n/a
EPDM H07RN-F 3G1.5 mm², Ø 10 mm	n/a	n/a	**21.3 mm**	n/a	n/a

This table is identical across the JEL range, so a site with Mantas under the canopy and DarkLichts on the forecourt works to one set of figures. The rows in bold are the ones that apply to the Manta: the four core tail of the standard version, 2 × 1.5 plus 2 × 0.5 mm², the four core silicone tail of the HT version, and the H07RN-F 3G1.5 recommended for the mains side. Here n/a means the combination is outside the clamping range of that gland and must not be used. Where a cable and a gland do not appear together in this table, ask JEL Products before you fit them.

7.6 Cable length and voltage drop

On a standard Manta the site cable carries mains at 0.36 to 0.83 A, and the cable is never the limit: a canopy circuit is sized on the MCB count of section 7.3 and on the normal mains drop, not on the luminaire. On the high temperature version the cable between the driver and the panel carries the driver output, and there the rule applies that the voltage drop must not exceed **2 V**.

HT VERSIONS, DRIVER OUTPUT TO PANEL, 50 VDC AT 1.0 A

Cross section	Maximum length
1.5 mm²	85 m
2.5 mm²	142 m
4 mm²	228 m

All lengths are the maximum at a 2 V drop, copper, two conductors, one way, rho 0.0175. The supplied 2.0 m of 2.5 mm² silicone is nowhere near the limit; a 150 m run stays inside 2 V at 4 mm². The thin pair follows in the same cable and carries no current worth mentioning.

> **NOTE, THE DIMMING PAIR**
>
> On a standard Manta the 0.5 mm² dimming pair carries a control signal, not power. On a 0 to 10 V circuit its length is set by the controller's source current and not by the drop; on DALI-2 by the DALI bus rules, 300 m at 1.5 mm². Keep it out of the same gland as the mains where the box allows.

CIRCUITS WITH SEVERAL PANELS

Standard	Every panel is a mains load of at most 0.45 A. Twelve panels on a 2.5 mm² circuit of 60 m drop about 4.5 V at 230 V, which is two per cent
HT	One driver per panel. Two panels never share a driver, and two panels never share a tail

7.7 Making the connection

> **DANGER, READ THE LABEL FIRST**
>
> On MNAC01, MNAC02 and MNAC03 **mains goes into the luminaire**, on the tail or through the IN gland of the compartment. On MNHT01 and MNHT02 mains goes to the driver and only the driver output reaches the panel. Mains on an HT tail destroys the panel. The two look alike from below; the cable tells them apart.

1. Confirm the circuit is dead and secured.
2. **Standard versions:** make the joint above the ceiling per section 7.1, L to L, N to N, earth carried through, dimming pair on the control circuit or capped, end sleeves on every conductor, one conductor per terminal.
3. **HT versions:** mount the driver or the driver box outside the hot zone and outside the wash down zone, in an ambient between minus 40 and plus 50 degrees Celsius, reachable without entering the hot zone. Earth the box, the tray and any metal enclosure.
4. **HT versions:** strip and terminate the conductors per section 7.2. Use end sleeves. One conductor per terminal. Keep the dimming conductors separated from the mains conductors.
5. Tighten the glands to 2.5 Nm and to dimension L in section 7.5. On the HT range then seal with heat shrink tubing and self amalgamating tape.
6. Support the tail with a drip loop above the ceiling, so that water on the cable runs off before the gland and no load reaches it.
7. Check that no conductor is pinched under a cover and that every gasket sits in its groove all the way round.

DRIVER BOX FOR THE HT VERSIONS

DRB-1	One driver up to 320 W, so it takes the BLD120 with room to spare. 276 × 194 × 86.5 mm, 4.2 kg, IP66 and IP67
Bare driver	Supplied bare as standard, for an existing enclosure or a tray, with both connections inside an IP67 junction box
Ambient	plus 50 degrees Celsius maximum, wherever it goes

Position the driver by the **ambient**, not by its case temperature.

8 Commissioning

Do not switch on until every item below has been checked. Most warranty cases that turn out not to be a product fault trace back to a step skipped here.

8.1 Checks before switching on

- ☐ Conditions within the range for that version, chapter 3, and no broken mechanical part: glass, panel, seal, bracket, tail.
- ☐ Supply checked against the label: 90 to 305 VAC on the tail or in the compartment of a standard panel, mains to the driver only on an HT panel.
- ☐ Joint: one conductor per terminal, end sleeves fitted, earth carried through, dimming pair on the control circuit or capped, glands at 2.5 Nm and dimension L, box closed.
- ☐ Recess: four rim screws at 3 Nm, seal compressed evenly. Surface: bracket screws into structure, four stud nuts at 5 Nm.
- ☐ Secondary retention fitted where section 6.5 requires it.
- ☐ Tail with a drip loop above the ceiling, not pinched, no weight on the gland.
- ☐ **HT only:** the driver sits outside the hot zone within plus 50 °C ambient, all four cores are connected, and the box is earthed and closed.
- ☐ Insulation resistance of the circuit measured with the panels connected, on a standard panel with the dimming pair isolated.
- ☐ 75 mm of free air above the fins, and nobody working within the hazard distance of section 4.3.

8.2 First power up

1. Restore the supply.
2. Confirm that it illuminates, and on a canopy circuit that every panel illuminates. **Do not look into the panel**, see section 4.3.
3. Check from the forecourt that the light lands where the design says and that no panel near the edge lights the road.
4. Record the installation: both label codes, the serial number, the position, the version, the optic, the colour temperature, the date and the installer.

8.3 Handover

Leave this manual with the site documentation, together with the record from step 4 of section 8.2 and the canopy wiring drawing that shows where every joint is.

WARNING

Never open a joint, a compartment or a box while it is energised. On the standard version mains is inside the panel. Isolate first, every time.

NOTE, MARK THE VERSIONS ON THE DRAWING

Mark the position, the version and the optic of each panel. A recess and a surface panel with the same optic look identical from below, and a 30 degree optic in a diffuse position leaves a bright patch under it and a dark lane next to it.

NOTE, A TUNEABLE WHITE PANEL ON FIRST POWER UP

A tuneable white build comes up in its default colour, which is normally the 4000 K white. Section 9.3 explains how it is switched, and it is worth demonstrating that at handover.

NOTE, THE FIRST HOT NIGHT

A canopy that has stood in the sun all day is hot when the lights come on. A panel that dims back in the first hour and recovers later is protecting itself, section 9.4; a panel that does that every night has too little air above it.

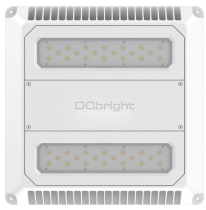

The Manta fitted. From below there is one glass, one panel and nothing to adjust

9 Operation and dimming

9.1 Normal operation

A Manta needs no operator action in normal service. It switches with the circuit and reaches full output immediately, with no warm up and no restrike delay, and it may be switched as often as the application requires, by a photocell, a timer or a presence sensor. In a cold store or a winter forecourt it starts at minus 45 degrees Celsius at full output. There is no lamp to change and nothing to adjust from year to year.

9.2 What each version accepts

Version	What it accepts
MNAC01, MNAC02, MNAC03	**0 to 10 V, PWM or DALI-2**, through the driver inside, on a luminaire ordered with dimming: the two grey conductors of the tail carry the signal. Or a fixed level set over **NFC** on the driver before the panel is closed at the factory
MNHT01, MNHT02	**0 to 10 V, PWM or DALI-2**, through the remote BLD120. Two grey conductors, 15 and 16, carry the signal. Or NFC on the driver
Tuneable white, BIC	4000 K with 2200 K and 1700 K, switched with the supply. See section 9.3. Not available on the high temperature versions

9.3 Tuneable white and amber

A tuneable white Manta carries three colours in one panel and switches between them **on the supply itself**, using how long the luminaire has been off. There is no second control line and no separate switch on the luminaire. On a forecourt near a nature area that is the night regime: white for the pumps, amber after closing.

What you do	What happens
Switch on after more than 5 seconds off	The luminaire comes up in its **default colour**, normally 4000 K, whatever colour it was showing before
Switch off and back on within 5 seconds	The luminaire steps to the **next colour**: 2200 K, then 1700 K, then back to 4000 K
Repeat the short cycle	It steps through the three colours, as often as you like
Several luminaires out of step	Switch the whole group off, **wait 30 seconds**, and switch on. All of them reset to the default colour and are back in step

Because the switching is on the supply, a tuneable white circuit fed from a relay that chatters or a photocell that hunts at dusk can change colour on its own. Where the colour has to be dependable, feed it from a clean switched circuit. Amber 2200 K on its own is available on every optic.

NOTE, DIMMING AND THE FLUX FIGURES

Every luminous flux figure in chapter 3 is the figure at full output. A dimmed luminaire delivers proportionally less light and slightly better efficacy. If the design relies on a dimmed level, the lighting calculation states that level.

9.4 What the luminaire does by itself

- **Thermal foldback.** The luminaire measures its internal temperature and reduces the current as it rises. On overheating it switches off and comes back when it has cooled. This is active on every version, and on the HT version it runs through the temperature pair in the cable.
- **Surge protection.** 6 kV line to line and 10 kV line to earth, on every version. A canopy is a lightning target; the surge protection of the site distribution is still required.
- **Undervoltage.** The driver shuts down below 90 V and restarts by itself when the supply returns.

9.5 What the luminaire does not do

- It does not carry an emergency function. See section 4.9.
- It does not accept a control protocol that is not in its build. Sending DALI to a 0 to 10 V luminaire has no effect, and a luminaire ordered without dimming has its grey pair capped for a reason.
- It does not run on DC. Every version is a 90 to 305 VAC luminaire, at the driver on HT.
- It does not share a driver. Every panel, standard or HT, has its own BLD120 programmed for it.

10 Maintenance

DANGER

Isolate the supply and secure it before any maintenance work. On the standard version mains is inside the panel. Let the luminaire cool to hand temperature before touching it. On the high temperature range that takes time, and the panel gives no visual warning that it is still hot.

10.1 Interval

Environment	Interval
Covered walkway, car park entrance, shelter	Once a year
Fuel forecourt, truck canopy, drive through	Twice a year, and clean the glass with every canopy wash
Loading docks, dust or exhaust	Twice a year or more, fins included
Wash bays and washdown	Weekly, daily on heavy soiling. Protocol in section 10.5
Hot process ceilings, HT range	Every planned shutdown, never while hot

Too little cleaning shortens the life of the product, most of all on a forecourt where exhaust film builds on the glass and on the fins above the ceiling.

10.2 Inspection

- ☐ Glass, panel and seal: damage, cracks, corrosion, a chipped glass edge, a gap at the rim.
- ☐ Rim screws or stud nuts tight. Retighten to the torque in section 6.6.
- ☐ Bracket screws and the canopy structure sound; no pulled screw in the skin.
- ☐ Secondary retention present, intact and correctly attached.
- ☐ Tail and joint above the ceiling: damage, corrosion, intact insulation, no moisture trace in the box, drip loop still above the gland.
- ☐ Compartment cover screws tight where the connection is inside.
- ☐ Fins and heatsink clear of dust, film and debris, the 75 mm above them open, no new duct or insulation in the void.
- ☐ Nothing built or hung within 75 mm of the panel or in the beam.
- ☐ **HT only:** the driver is still outside the hot zone and the silicone cable is not resting against a hot surface.

10.3 Records

Record every inspection, fault, repair and replacement, with both codes from the label. Under warranty, that record is the difference between a fast decision and a long discussion.



The heatsink of the recess panel, above the ceiling. This is what has to stay clear, and it is the driver's heat sink too

WHY THE FINS MATTER

The Manta has no fan, no vents and no moving part. Everything the LEDs produce, and on the standard version everything the driver produces, leaves through the fins, and the panel is sealed precisely so that nothing gets in. Dust on the fins raises the junction temperature, and the lifetime figures in chapter 3 assume a clean heat sink. **The 224 lumens per watt hold for the life of the installation, but only if the fins are kept clear.** Above a forecourt the void collects road film in a season, so look above the ceiling at every inspection, not only below it.

CAUTION

Do not hammer, pry or scrape between the fins. A soft brush and compressed air clear them. A screwdriver breaks a fin, and the fin is cast into the panel.

10.4 Cleaning, standard versions in a normal environment

1. Switch off the supply and let the luminaire cool.
2. Remove loose debris from the glass with a soft brush.
3. Clean the glass and the visible rim with a soft cloth or sponge, water and a mild detergent. On a forecourt an exhaust film needs a second pass.
4. Clear the fins above the ceiling where they are reachable, then dry the glass with a soft cloth. A diffuse front shows every streak in the light, so finish with a dry cloth.

CAUTION

Do not use solvents, caustic cleaners or abrasives. Do not aim a high pressure lance at the rim seal, the compartment cover or a box above the ceiling. The Manta is rated IP69K, but the canopy around it is not, and the seal is the one place where pressure does damage.

10.5 Cleaning, washdown areas and the high temperature range

In a wash bay, a food area and on the high temperature range, the Manta is cleaned to JEL Products protocol B5.17, version 1.0 of 27 May 2026. Written for the food industry, it is the stricter of the two procedures and it is the one a HACCP file asks for. One exception: the HT range does tolerate steam.

BEFORE YOU START

- Switch off the supply to the luminaire.
- Let the luminaire cool to hand temperature.
- Inspect the glass, the seal, the rim, the cable and the panel for damage.

PERMITTED

Water	Clean mains water, lukewarm, maximum plus 40 degrees Celsius
Cloth	Soft microfibre cloth
Sponge	Soft sponge

NOT PERMITTED

Cleaning agents	No aggressive or chemical cleaners, no foaming agents, no solvents
Chemistry	No chlorine based, acid based or alkaline cleaners, no alcohols, no degreasers
Mechanical	No wire brushes, no abrasives, no scouring agents
Steam	No steam cleaning on a standard luminaire. **On the high temperature range steam cleaning is permitted**
Pressure	No high pressure above 80 bar

IP69K is what makes this possible. Every Manta carries IP69K, the high pressure steam jet test, and that is what a canopy wash actually applies. Most canopy luminaires are rated for a dry indoor ceiling; this one is rated for the lance.

PROCEDURE

1. **Pre-rinse.** Rinse the panel with clean water to remove loose soiling. Use a broad jet and do not hold it on the rim seal.
2. **Manual cleaning.** Clean the glass with a soft sponge or microfibre cloth and clean lukewarm water only.
3. **High pressure cleaning.** Maximum 80 bar, maximum plus 40 degrees Celsius, minimum distance 50 cm. Do not spray at right angles onto the rim seal for any length of time.
4. **Rinse.** Rinse the panel with clean water.
5. **Inspect.** Check the glass, the seal, the fixings and for any sign of moisture inside.

PREVENTING DAMAGE

WARNING, THERMAL SHOCK

Never clean hot glass with cold water. **Do not apply water at all to a luminaire warmer than plus 60 degrees Celsius.** On the high temperature range the front can break, and it breaks downward, towards whoever is holding the lance.

Cleaning outside these limits can damage the glass, cause leakage, attack the seals and void both the ingress classification and the warranty.

FREQUENCY

Normal production environment	Weekly
Heavy soiling	Daily
High fat load	After every production run

Source: JEL Products document B5.17, version 1.0, 27 May 2026. Ask us for the full protocol if you need it for a HACCP file.

11 Fault finding

Work through this table before reporting a fault. Isolate the supply before any action that involves opening a joint, a compartment or a box. Most faults reported to us on this product turn out to be the joint above the ceiling, the air above the heatsink, or a panel that was connected as the wrong version.

Symptom	Applies to	Probable cause	Action
No light at all	All	Supply off, breaker tripped, photocell or timer holding the circuit off, or a break in the joint	Check the breaker and the control, then measure the supply in the joint of the first dark panel
No light, mains present in the joint	Standard	Driver inside failed, or the dimming pair landed on the mains terminals	Check the joint against section 7.1. A failed internal driver is a luminaire exchange, section 12.2
No light, supply present at the driver	HT	Driver failed, or the temperature pair not connected so the driver reads an open circuit	Check all four cores through to the panel, then replace the driver at ground level, section 12.3
Panel destroyed on switch on	HT	Mains connected to the silicone tail	Not a warranty case. Read the label, section 2.5, and replace the panel
Breaker trips on switch on	All	Too many panels on one breaker for the inrush	Reduce the number per breaker or change the characteristic, section 7.3
Residual current device trips	All	Combined leakage current of the circuit, or water in a joint	Split the circuit or size the device for 0.7 mA per panel; open and dry the joints
Output drops back after the process heats up	HT	**Normal behaviour.** The thermal self-protection is dimming the panel	No action. See section 3.3. Report it only if it happens below the rated ambient
Dims back every evening, standard version	All	Thermal foldback: no air above the heatsink, insulation in the void, or a dark canopy skin in the sun	Open the void above the panel, clear the fins, or move the panel
Flicker or unstable output	All	Loose terminal in the joint, or a dimming signal picking up interference	Retighten the terminals and separate the dimming pair from the mains conductors
Panel stays at partial output	All	Dimming input at a low level, or an NFC setting from a previous project	Check the control signal and the driver setting, section 9.2
Control signal does nothing	All	That protocol is not in this build	Check the quotation against section 9.2. A panel without dimming has its grey pair capped
Changes colour on its own	Tuneable white	The supply is being interrupted for less than 5 seconds by a hunting photocell or a chattering relay	Feed it from a clean switched circuit, section 9.3
Output visibly lower than the design	All	Exhaust film on the glass or blocked fins	Clean per section 10.4 or 10.5, then measure again
Bright patch under one panel, dark lane beside it	All	A 30 degree optic fitted in a diffuse position	Compare the article codes on the labels with the design
Light on the road past the canopy edge	All	Diffuse panel too close to a free edge	Section 6.7. Move the panel one width in, or change the optic at the next replacement
Moisture inside the joint	All	Gland not tightened to dimension L, gasket out of its groove, no drip loop	Isolate, dry, refit the gasket, retighten to dimension L in section 7.5, add the drip loop
Moisture inside the panel	All	Chipped glass edge, a panel rested on its glass, or a lance held on the rim seal	Do not open it. Return to JEL Products, section 12.4
Panel loose or sagging at one corner	All	A screw pulled out of the skin, or a stud nut worked loose	Refit per chapter 6 into structure or a backing plate, with a rated safety cable
Early driver failure, repeated	HT	The driver ambient is above plus 50 degrees Celsius, or the driver is on the oven roof	Measure the ambient at the driver. Relocate it, section 7.4

If the fault is not in this table, or if the action does not resolve it, contact JEL Products with the article code and the internal production code from the type label, the position on the canopy, the date of installation and what you have already checked. See section 2.5 for the two codes.

12 Repair and spare parts

The Manta is built so that nothing needs to be reached in service, and that cuts both ways. On the HT versions the driver sits outside the panel and is replaced at ground level. On the standard versions the driver is inside the sealed panel: there, a driver fault is a luminaire exchange, and the joint above the ceiling is what makes that exchange a short job.

12.1 What is replaceable on site

Part	Reference	Note
Remote driver, HT	BLD120	161 × 68 × 33.5 mm, 800 g, 90 to 305 VAC. Replaced without opening the panel. Quote the version
Driver box	DRB-1	276 × 194 × 86.5 mm, 4.2 kg, IP66 and IP67. One driver up to 320 W
Ceiling bracket	DCB_Canopy Light_bracket	Aluminium, with four M5 studs and nuts. For the surface and surface extended versions
Stud nuts and rim screws	On request	M5 nuts with washers, M4 rim screws, A4 stainless steel, supplied as a set
Compartment cover gasket	On request	On a panel with the connection inside. Replace whenever it has been out of its groove or has taken a set
Cable gland and blanking plug	M20 × 1.5	With O-ring. For the compartment, the skirt of a Surface Extended, or the box
Safety cable	On request	1 m, rated to the luminaire weight. Not supplied as standard, see section 6.5
Cable assembly, HT	On request	SiHF-OB silicone, 4 cores, length per order

Brackets, gaskets, safety cables and cable assemblies are supplied against a specification rather than a shelf article number, because they follow the version. State both codes from the type label and we issue the right part.



DRB-1 driver box. One driver up to 320 W, so it takes the BLD120 of a Manta HT with room to spare



The ceiling bracket is a spare part on its own: a damaged bracket does not mean a new panel

Quote the article code and the internal production code from the type label in any spare part order, see section 2.5. A BLD120 programmed for a 50 W HT panel does not run a 100 W standard panel, and the reverse.

12.2 What is not replaceable on site

DANGER

Do not open the panel beyond the driver compartment cover and do not remove the glass. Opening the luminaire ends its ingress protection, its electrical safety, its warranty and its declaration of conformity.

- The light source is not replaceable in the field. At the end of its life the complete panel is returned or replaced.
- The optics are fitted at the factory. A change of beam angle is a change of luminaire.
- **On the standard versions the driver is inside the sealed panel** and is not a field part, even where the compartment cover gives access to its terminals. A driver fault means the panel is exchanged. That is the trade for having nothing above the ceiling on a canopy.
- The glass and its seal are not replaceable in the field. A chipped or cracked front returns to JEL Products.
- Repair, overhaul and modification are carried out by JEL Products or by a company it appoints. In case of doubt, return the panel for inspection.

12.3 Driver replacement, HT

1. Isolate the supply and secure it. Verify the circuit is dead. Let the panel and the cable cool.
2. Open the driver box or the junction box the bare driver sits in, and photograph the wiring before you disconnect anything. Note the ambient: if it is above plus 50 degrees Celsius, the position is the fault and the new driver will fail as well.
3. Disconnect the driver at CON 1 and CON 2, following the table in section 7.2.
4. Fit the replacement BLD120 programmed for the Manta HT, and reconnect according to section 7.2, one conductor per terminal. A different driver is not permitted.
5. Close the box, check the seal, restore the supply and run the checks in section 8.1. Record the replacement, with the date and both codes from the label, in the site documentation.

NOTE

The internal production code tells us which board is in the panel the driver has to work with. Quote both codes.

12.4 Returning a luminaire

1. Contact JEL Products before you send anything. We will tell you whether the fault is a field repair, a driver exchange or a return.
2. Have both codes from the type label ready, plus the position on the canopy, the date of installation and what you have already checked from chapter 11.
3. Pack the panel in its original box, glass up, resting on its back or its bracket, never on the glass. Leave the bracket on a surface panel.
4. On an HT panel, let it cool completely and state the ambient it was working in. Coil the silicone cable rather than folding it.

NOTE

Do not open a panel before returning it, not even to look. An opened panel changes a warranty assessment into a discussion, and the evidence we need is usually inside the seal you would break.

WHAT WE LOOK AT ON A RETURN

The internal code	Which board, which batch, which production date
The seal and the entry	Whether water got in, and from where
The driver	Case temperature history and failure mode, inside or outside
The glass	Thermal shock, impact or a chipped edge
The fins	Whether the panel had air above it, from the discolouration
The supply	Whether an HT panel saw mains, or a standard panel a circuit it was not calculated for



Manta HT Recess, Titanium Grey. The high temperature version returns with its silicone cable, which is part of the luminaire and not an accessory

13 Removal and disposal

13.1 Taking the luminaire out of service

1. Isolate the supply and secure it. Verify the circuit is dead, then disconnect the panel in its joint above the ceiling, at the driver box on an HT version. Where the circuit continues to the next panel, reconnect the through conductors in the box.
2. On the HT range, let the panel and its cable cool to hand temperature and wait for the zone to be released. It gives no visual warning that it is still hot.
3. Cap the tail ends, so the conductors stay dry in storage.
4. Two people. Release the secondary retention last, not first.
5. Undo the four rim screws or the four stud nuts with the panel held flat against the ceiling throughout, and lower it glass up.
6. Label the panel with its position, version and article code before it leaves the site. If it is to be reinstalled, pack it in its original box, glass up, resting on its back.

WARNING, WORKING OVERHEAD

Removal is the moment a panel falls. Have the second person in place before you loosen anything, close the lane, and keep the area below clear. A 380 mm panel that comes off three of its four screws hangs on the fourth and then drops glass first.

13.2 Disposal



Electrical equipment does not belong in household or unsorted municipal waste. Under European Directive 2012/19/EU it must be collected separately and processed by an approved recycling facility. Observe the national and regional rules at the place of disposal.

The cast aluminium panel and the aluminium bracket are recyclable materials; the LED board, the driver inside a standard panel or outside an HT panel, the glass and the cable go to electronic waste and glass. Separate the panel from the electronics at the recycler rather than in the field. The Manta contains no mercury and no lead above the RoHS limits.

Glossary

Beam angle	Full angle between the directions where the intensity has fallen to 50 per cent of the peak. The field angle uses 10 per cent
C5	Corrosivity category per ISO 9223, industrial and marine
Ceiling bracket	The hat shaped aluminium plate that carries a surface panel on four M5 studs
CREE 304	An earlier canopy luminaire whose opening the Surface Extended fits
CRI, Ra	Colour rendering index
DALI-2	Addressable digital lighting control protocol
Diffuse front	The frosted glass that spreads the light of the LED board, 136 degrees without an optic
Driver compartment	The covered space on the rear of the panel that holds the driver and, on some panels, the connection
Hazard distance	The distance beyond which the luminaire is Risk Group 1 per IEC/TR 62778
HT	High temperature range
IK	Impact rating per IEC 62262
Joint	The connection between the tail and the site cable, in an IP67 box above the ceiling
L90B05	90 per cent of initial output retained by 95 per cent of the units
MCB	Miniature circuit breaker
NFC	Near field communication, used to set the driver without power
NTC	Negative temperature coefficient, the temperature sensor in the panel
PWM	Pulse width modulation, a dimming method
SiHF-OB	Heat resistant silicone cable, used on the high temperature range
Ta, Tc	Ambient temperature, and the case temperature of the driver
BIC	Bi-colour, the tuneable white build, 4000 K with 2200 K and 1700 K, switched from the supply
ULOR	Upward light output ratio
WEEE	Waste electrical and electronic equipment

Specifications are subject to change. This manual describes the standard configurations. Where a project specification differs, the project documentation takes precedence.

14 Appendix

14.1 Declaration of conformity

EU Declaration of Conformity, 9 December 2025

JEL Products B.V., Ampèrestraat 19e, 3861 NC Nijkerk, The Netherlands, declares under its sole responsibility that the products it covers are in conformity with the essential requirements of the directives below. The Manta Series is named in its product scope as **Manta Series, Recess and Surface, including the HT versions**, with all electrical, optical and mechanical variants within the defined type codes, wattages, voltages and colour temperatures.

DIRECTIVES	
Low Voltage	2014/35/EU
EMC	2014/30/EU
RoHS	2011/65/EU and (EU) 2015/863
WEEE	2012/19/EU

DECLARATION	
Date	9 December 2025
Place of issue	Nijkerk
Signed by	L. de Graaf, Technical Director
Serial number	See product marking
Year of manufacture	2024 to 2026

APPLIED HARMONISED STANDARDS

EN IEC 60598-1 luminaires, general requirements. EN IEC 60598-2-5 floodlights. EN IEC 61347-1 lamp controlgear, general. EN IEC 61347-2-13 LED controlgear. EN IEC 62384 LED driver performance. EN IEC 60529 IP classification. EN IEC 61000-6-2 EMC immunity, industrial. EN IEC 61000-6-4 EMC emission, industrial. EN ISO 12100 risk assessment, where applicable.

The technical file is compiled and maintained by JEL Products B.V. at the address above. The **signed declaration** is available on request and is supplied with the project documentation. Document: EU DECLARATION OF CONFORMITY_DCbright_EU_09122025.

14.2 Warranty

Family	Housing	Electrical and seals
Recess, Surface, Surface Extended	5 years on the complete luminaire, driver included	
High temperature	5 years on the complete luminaire, to plus 120 degrees Celsius	
Ceiling bracket and compartment gasket	5 years. The gasket is replaced whenever the cover has been off in a washdown area	

Warranty runs from the date of delivery under the JEL Products warranty terms and covers material and manufacturing defects.

It does not apply where the luminaire has been installed, operated or maintained contrary to this manual, where the panel has been opened beyond the compartment cover, where mains has been connected to an HT tail, where the supply was outside 90 to 305 VAC, where the temperature pair of an HT version has been disconnected or shorted, where the driver has been installed inside a hot zone or above plus 50 degrees Celsius ambient, where the heatsink has been boxed in, where the panel has hung on fewer than four screws, where it has been cleaned outside the limits in section 10.5, or where it has been used outside the intended use in section 2.2.

> **NOTE**
> Improper installation, operation or maintenance may also invalidate the certificate and the declaration of conformity, not only the warranty.

14.3 Related documents

Document	Where
Manta canopy datasheet, Rev. 1, 20 August 2026	Product page
Manta HT datasheet, Rev. 2, 18 November 2026	Product page
Photometric files per optic, EULUMDAT and IES	Product page
Dimensioned drawings of the recess, surface and extended panel and the ceiling bracket, DXF and STEP	On request
Driver box manual, DRB-1	On request
Signed declaration of conformity	On request, and with the project documentation
Test and inspection reports, see section 3.4	On request

14.4 What this manual replaces

This edition supersedes the DCbright Manual Manta of 12 March 2026. Where the older document and this manual disagree, this manual applies.

Six points are corrected against that document: the impact rating is **IK08** and not IK07; the ambient range is **minus 45 to plus 50 degrees Celsius**, not minus 40; the expected life is stated as **TM-21 L90B05 above 360,000 h at 50 degrees Celsius**, not as the LM80 and LM70 figures printed there; the warranty is **5 years** and not 3; the 60 W versions and the OP and PRO suffixes are no longer used; and the standard panel is **Class I**, earthed because the driver is inside, where the datasheet prints Class II. The standard version is the PRO build of that document, 22,400 lm at 224 lm/W; the optic version is its OP build. Two points are stated more precisely: the connection is made in a joint above the ceiling on a panel with a tail, and inside the driver compartment on a panel with an IN gland, section 7.1; and the Surface Extended carries the code MNAC03 in this manual where the datasheet still says not yet issued.

> **NOTE**
> If you hold a printed copy, check the revision on the cover against the version on the product page before you rely on a figure. A manual in a site file can be several years old.

CONTACT

JEL Products B.V.

Ampèrestraat 19e
3861 NC Nijkerk
The Netherlands

+31 (0)33 785 9809
info@jelproducts.nl
jelproducts.nl

To verify the authenticity of a test or inspection report and certificate, contact us on the number above. Quote both codes from the type label.

Product page

Photometric files, drawings, both datasheets and the current version of this manual.

jelproducts.nl/en/products/manta-canopy-light

DOCUMENT

Number	MAN-MNS-EN
Revision	2
Date	18 November 2026
Language	English
Applies to	MNAC01, MNAC02, MNAC03, MNHT01 and MNHT02
Pages	See the footer