JEL PRODUCTS
SUSTAINABLE | LIGHTING | SOLUTIONS

INSTRUCTION MANUAL

Barracuda Series

Industrial LED floodlight, one manual for all three families: cast aluminium AC and DC, 316L stainless steel, and the high temperature range.

DOCUMENT	REVISION	DATE	LANGUAGE
MAN-BAS-EN	2	18 / 11 / 2026	EN



Read before installation · Keep for future use · Qualified personnel only · BAAC01 · BADC01 · BASS01 · BAHT01 to BAHT04

JEL Products B.V. · Ampèrestraat 19e · 3861 NC Nijkerk · The Netherlands

jelproducts.nl

Contents

This manual covers the whole Barracuda Series. Most of what follows applies to every version, because the housing, the bracket, the connectors and the wiring are shared. Where a section applies to one family only, the family is named in the heading or in the row.

BEFORE YOU START

1	**About this document**	Who it is for, symbols, hazard classes, revision history
2	**The product**	The three families, intended use, order codes, the type label
3	**Technical data**	Specification per family, dimensions, weight and wind load, standards
4	**Safety**	Electrical, optical, falling, hot surfaces, and what must never be done

INSTALLATION

5	**Preparation**	Transport, storage, contents of the delivery, tools, unpacking
6	**Mechanical mounting**	Standard bracket, the three configurations, secondary retention, torques, aiming
7	**Electrical installation**	AC wiring, DC wiring, the high temperature system, glands, cable length
8	**Commissioning**	Checks before switching on, first power up, final aiming
9	**Operation and dimming**	What each version accepts, and what is custom

THROUGH LIFE

10	**Maintenance**	Intervals, inspection, cleaning, and the stainless and HT protocol
11	**Fault finding**	Symptom, probable cause, action
12	**Repair and spare parts**	What is replaceable on site and what returns to JEL Products
13	**Removal and disposal**	Taking the luminaire out of service, WEEE, glossary
14	**Appendix**	Declaration of conformity, warranty, contact and documents

WHICH VERSION DO YOU HAVE

Code on the label	Family
BAAC01	Cast aluminium, AC, remote driver
BADC01	Cast aluminium, DC 24 V, drivers on board
BASS01	316L stainless steel, AC or DC
BAHT01	High temperature, aluminium, no lens
BAHT02	High temperature, aluminium, HT glass optic
BAHT03	High temperature, 316L, no lens
BAHT04	High temperature, 316L, HT glass optic

The code is on the type label on the rear of the housing. Section 2.5 explains the label, including the second code that is not an article number.

PRODUCT PAGE

Photometric files per optic, drawings, the datasheets and the current version of this manual.

jelproducts.nl/en/products/barracuda

KEEP THIS MANUAL

Store it with the site documentation and pass it on to every person who works on the luminaire.

1 About this document

Read this manual and understand its safety instructions before you install, operate or maintain the luminaire. Failure to do so can result in serious injury or death.

1.1 Who this document is for

This manual is written for the buyer, the installer, the maintenance technician and the end user. Assembly, installation, commissioning and maintenance may only be carried out by a qualified person: someone with electrical training who can recognise the risks described here and avoid the hazards that arise during the work.

Every person who works on the luminaire must have read these warnings and must follow them. Keep the manual for the service life of the installation.

1.2 Hazard classes

Safety information in this manual is graded. The class tells you how serious the consequence is if the instruction is ignored.

DANGER
A hazard with a high level of risk which, if not avoided, will result in death or serious injury.

WARNING
A hazard with a medium level of risk which, if not avoided, could result in death or serious injury.

CAUTION
A hazard with a low level of risk which, if not avoided, could result in minor or moderate injury.

NOTE
Information that matters for a correct result but that is not related to a hazard.

1.3 Symbols


Electrical hazard
Live parts. Isolate the supply before working on the luminaire.


General hazard
Described in the text beside the symbol.


Optical radiation
Do not look into the operating light source.


Hot surface
High temperature range. The housing reaches process temperature.


Crush hazard
Moving parts during mounting and aiming.


Two persons
This step must be carried out by two people.


Read the manual
Read and understand it before use.


Protective earth
Terminal for the protective earth conductor.


CE marking
Complies with the applicable European legislation.


Separate collection
Not unsorted municipal waste.

1.4 Feedback

The latest version is on the product page. If you find an error, write to info@jelproducts.nl. We would rather correct a sentence than have an installer guess.

1.5 Revision history and what this edition replaces

Barracuda luminaires have been supplied since before 2024 and earlier editions exist. **This edition supersedes all of them, including the Operating Instruction of 19 February 2024** and the separate instructions for the stainless steel and high temperature versions. Where an older document and this manual disagree, this manual applies.

Date	Revision	Change
Before 2024	-	Earlier editions, issued per version. Superseded
19 February 2024	-	Operating Instruction DCbrightOperatingInstruction-Barracuda, cast aluminium only. Superseded
4 September 2026	1	First edition of the combined manual, covering all three families in one document. Rewritten to the JEL Products manual standard: numbered chapters, hazard classes and symbols, intended use and foreseeable misuse, weight and wind load, the AC and DC wiring diagrams, the high temperature system, the cleaning protocol, the type label, cable length, fault finding and spare parts
18 November 2026	2	EMC corrected: EN 55015 and EN 61547 third-party tested, not by TÜV. IEC 60533 withdrawn.

2 The product

The Barracuda is a wide-body heavy-duty LED floodlight in a cast aluminium or 316L stainless steel housing, built for large outdoor areas and hot process environments where light output and mechanical robustness weigh heavier than the last kilogram.

2.1 The three families

Same housing footprint, same bracket, same connectors and, within the AC and DC families, the same optics. Front view of each, because that is where they differ most.



Cast aluminium, AC and DC. Polycarbonate lens plate, titanium-based e-coating. BAAC01 and BADC01



316L stainless steel. Solid stainless, electrolytically polished, for permanent salt exposure. BASS01

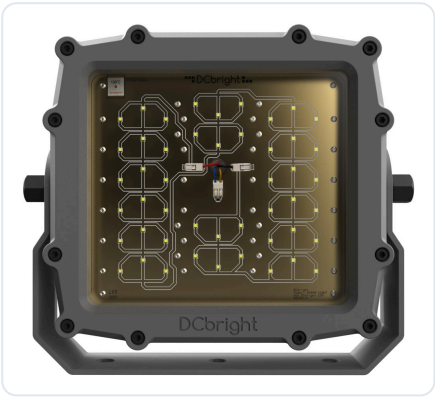

High temperature. Glass front and IR-reflective print, rated to plus 120 degrees Celsius. BAHT01 to BAHT04

	Cast aluminium	316L stainless steel	High temperature
Article base code	BAAC01 · BADC01	BASS01	BAHT01 to BAHT04
Luminous flux	44,100 lm AC · 40,800 lm DC	44,100 lm AC · 40,800 lm DC	20,600 lm
Power	320 W	320 W	120 W
Efficacy	138 lm/W AC · 128 lm/W DC	138 lm/W AC · 128 lm/W DC	172 lm/W
Ambient	minus 45 to plus 50 °C	minus 45 to plus 50 °C	minus 45 to plus 120 °C, peaks to 130 °C
Housing	Cast aluminium, e-coated	316L, electrolytically polished	Cast aluminium or 316L
Front	Polycarbonate IK10, glass IK09 on request	Polycarbonate IK10, glass IK09 on request	Chemically hardened or borosilicate glass, IK09
Optics	14, 38, 69, 14 by 46 degrees	Identical to cast aluminium	No lens 133 degrees, or HT glass 20, 40, 60 degrees on request
Supply	90 to 305 or 180 to 528 VAC, or 20 to 35 VDC	90 to 305 or 180 to 528 VAC, or 20 to 35 VDC	90 to 305 VAC
Cable as supplied	H07BQ-F	H07BQ-F	SiHF-OB heat resistant silicone
Corrosion class	C5, ISO 9223	C5 and CX, ISO 9223	C5, ISO 9223
Weight incl. bracket	10.1 kg	16.0 kg	10.1 kg aluminium · 16.0 kg 316L
Warranty	5 years complete luminaire	20 years housing, 5 years electrical and seals	5 years complete luminaire to plus 120 °C. Stainless housings 20 years on the housing

Photometry of the stainless steel version is identical to the cast aluminium version, so a mixed site keeps one light calculation. The high temperature range has its own photometry because it uses a different LED engine and a glass front.

2.2 Intended use

The Barracuda is intended for permanent professional installation as area and task lighting, within the ambient temperature range and the supply range of the version you have. Typical applications:

Family	Where it is used
Cast aluminium, AC and DC	Container terminals and stacking yards, ship to shore and RTG crane booms, quays, jetties and ro-ro ramps, bulk terminals and stockpiles, shipyards and dry docks, process plants and tank farms, outdoor storage and log yards, recycling and waste transfer, heavy vehicle yards, perimeter and high mast lighting
316L stainless steel	Fishing and lift vessels, offshore platforms and jack-ups, quays with permanent salt exposure, chemical plants and tank farms, fertiliser and salt handling, waste water and sludge treatment, fish processing and cold stores, dredging and marine construction, food industry wash-down areas
High temperature	Rolling mills, casting platforms and ladle bays, mineral wool production, building materials and kilns, oven zones in heavy process industry, paper machines and drying sections, glass and ceramics, foundries and heat treatment, asphalt and cement plants, aluminium smelters and anode plants

It is mounted on a mast, a bracket, a crane boom or a structure capable of carrying its weight and wind load, and is aimed according to a lighting design.

2.3 What the luminaire is not for

The following uses are outside the intended use. They are not covered by the warranty and, in several cases, they are unsafe.

- **Explosive atmospheres.** No Barracuda is ATEX or IECEx certified. None may be installed in a zoned hazardous area.
- **Ambient above plus 50 degrees Celsius, for the aluminium and stainless steel versions.** Above that the driver is the limit. For process heat, use the high temperature range instead.
- **Ambient above plus 120 degrees Celsius continuous, for the high temperature range.** Short peaks to plus 130 are permitted. Sustained operation above 120 is not.
- **Permanent immersion.** IP68 is verified to 5 metres as a test class, not as a continuous operating condition.
- **Direct mounting against thermal insulation or a closed ceiling.** A minimum of 75 mm clear space to insulation and building parts is required.
- **Consumer, decorative, domestic or vessel accommodation lighting.**
- **Emergency or escape route lighting.** No Barracuda has battery back up or a self test.
- **Uplight applications.** Nothing is emitted above the horizontal at nil tilt, and the luminaire is not designed to be aimed upward.
- **Operation with a damaged housing, front, cable or bracket**, or with a driver other than the driver supplied for that luminaire.

2.4 Order codes

BAAC01-65K.38

BAAC01	Cast aluminium, AC, remote driver
BADC01	Cast aluminium, DC 20 to 35 VDC, drivers on board
BASS01	316L stainless steel
BAHT01	HT, cast aluminium, no lens 133 degrees
BAHT02	HT, cast aluminium, HT glass optic
BAHT03	HT, 316L, no lens 133 degrees
BAHT04	HT, 316L, HT glass optic
65K to 22K	6500, 5000, 4000, 2700 K, amber 2200 K
BI	Bi-colour 4000 K with amber 2200 K
.14 .38 .69 .14x46	Optic, from the light calculation. Not used on HT models

Bracket type, control protocol, cable length and the Ra 80 or Ra 90 option are confirmed at order and are not part of the code. HT models carry a colour temperature suffix of -65K, -40K or -27K.

2.5 The type label, and the second code on it

The type label on the rear of the housing carries the article code, and the driver carries a label of its own. Both labels also show a **second code that is not an article number and that will not match what you ordered**. That is correct and it is deliberate.

> **NOTE**
>
> The second code is a JEL Products internal production code. It records the specific printed circuit board fitted, the production batch and the production date. We use it for traceability, for warranty and for service. It carries no information you need in order to specify, order or reorder a luminaire.

When you contact us about a luminaire, quote both. The article code tells us what it is. The internal code tells us exactly which one it is, which board is in it and when it was built, and that is usually what settles a service question in one call instead of three.

Do not use the internal code on a purchase order.

3 Technical data

All values apply to the standard configuration at 25 degrees Celsius ambient, including lens losses and driver consumption. A hyphen means the entry does not apply to that version. A bi-colour or high CRI build changes the luminous flux; the quotation states the figure.

	Aluminium AC	Aluminium DC 24 V	316L SS	High temperature
PERFORMANCE				
Luminous flux	44,100 lm	40,800 lm	44,100 lm AC, 40,800 lm DC	20,600 lm
Power consumption	320 W	320 W	320 W	120 W
Efficacy	138 lm/W	128 lm/W	138 or 128 lm/W	172 lm/W
Colour temperature	6500 K, 5000 K, 4000 K, 2700 K, amber 2200 K. 6500 K delivers the same flux as 4000 K			6500, 4000 or 2700 K
Colour rendering	Ra above 70 standard, Ra 80 or Ra 90 on request. MacAdam step 3 or better			
Optics	14, 38, 69 and 14 by 46 degrees, may be mixed		Identical to aluminium	No lens 133 degrees. HT glass 20, 40 or 60 on request
Upward light output ratio	0 per cent at nil tilt			
TEMPERATURE AND LIFETIME				
Ambient temperature	minus 45 to plus 50 degrees Celsius			minus 45 to plus 120 degrees Celsius continuous, peaks to plus 130
LED service life, TM-21 L90B05	above 360,000 h at 50 °C, so the driver is the wear part			See section 3.3
ELECTRICAL AND DRIVER				
Supply voltage range	90 to 305 VAC via BLD320, or 180 to 528 VAC via TLD320, 50/60 Hz	20 to 35 VDC, 24 V nominal	As the aluminium AC and DC versions	90 to 305 VAC, 50/60 Hz. 380 VAC for up to 2 h
Current draw	BLD320: 2.9 A at 120 V, 1.5 A at 220 V. TLD320: 1.3 A at 277 V, 0.75 A at 480 V	13.4 A at 24 V	As the aluminium versions	1.1 A at 110 V, 0.6 A at 220 V
Power factor at full load	Above 0.95 with BLD320, 0.96 at 230 V. Above 0.9 with TLD320	-	As the aluminium AC version	Above 0.95 at 60 to 100 per cent load
THD at full load	Below 15 per cent at 60 to 100 per cent load	-	Below 15 per cent	Below 15 per cent
Inrush current at 220 V	BLD320: 31.2 A peak, T50 1.3 ms. TLD320: 64 A peak, T50 400 microseconds	-	As the aluminium AC version	31.2 A peak, T50 1.3 ms
Surge protection	6 kV line to line, 10 kV line to earth, IEC 61000-4-5		As the aluminium AC version	6 kV line to line, 10 kV line to earth
Leakage current	0.7 mA maximum, IEC 60598-1			0.7 mA maximum at 240 VAC
Dimming and control	0 to 10 V standard. DALI-2 and NFC optional, PWM custom	Custom	As the aluminium versions	0 to 10 V standard. PWM, DALI-2, LoRa Mesh or NFC optional
Driver	Remote BLD320 or TLD320, 225 × 68 × 38.5 mm, 1,120 or 1,150 g	DC drivers on board	Remote, or DC on board	Remote BLD320, always outside the hot zone
Driver life	At least 100,000 h at case temperature 75 degrees Celsius, MTBF at least 280,000 h		As the aluminium versions	At least 100,000 h at case temperature 75 degrees Celsius

3 Technical data, continued

	Aluminium AC	Aluminium DC 24 V	316L SS	High temperature
CONSTRUCTION				
Housing	Cast aluminium, less than 0.08 per cent copper		316L stainless steel	Cast aluminium, or 316L
Surface finish	Conversion layer plus two layer titanium-based e-coating, Titanium Black		Electrolytically polished	E-coating in Titanium Light Grey, or polished 316L. IR-reflective print standard
Bracket	High tensile 316L stainless steel, fully rotatable through 360 degrees in 30 degree steps			
Front	Polycarbonate IK10 as standard, impact resistant glass IK09 on request			Chemically hardened glass, or borosilicate. IK09
Protection class	Class II			
Ingress protection	IP66, IP67, IP68 to 5 m and IP69K, each class tested separately, so IP69K does not imply IP68			
Corrosion class	C5 industrial and marine, ISO 9223		C5 and CX, ISO 9223. 316L is CRC III per EN 1993-1-4, PREN approximately 24	C5, ISO 9223
Vibration and shock	6 G at resonant frequency, IEC 60068-2-6. Shock tested to IEC 60068-2-27			
CABLE AND WARRANTY				
Cable and termination	H07BQ-F, 4 cores, 2 × 2.5 mm² plus 2 × 0.5 mm², free wire ends	H07BQ-F, 2 cores, 2 × 2.5 mm²	As the aluminium versions	SiHF-OB heat resistant silicone, 4 cores, 2 × 2.5 plus 2 × 0.5 mm², up to 150 m on request
Storage temperature	minus 45 to plus 50 degrees Celsius, dry, in the original packaging			
Warranty	5 years on the complete luminaire		20 years on the housing, 5 years on the electrical components and the seals	5 years to plus 120 degrees Celsius. Stainless housings 20 years on the housing

The cable length as supplied is not a fixed figure. It follows the order, so check the packing list or the quotation. See section 5.2.

3.1 Dimensions, weight and wind load, cast aluminium

All drawings are dimensioned in millimetres. DXF and STEP models are available on request. The figures below are what the structural engineer needs: they determine the bracket, the mast and the bolt size.

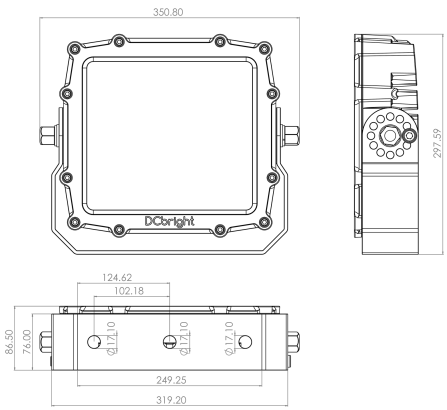

Standard bracket, principal dimensions

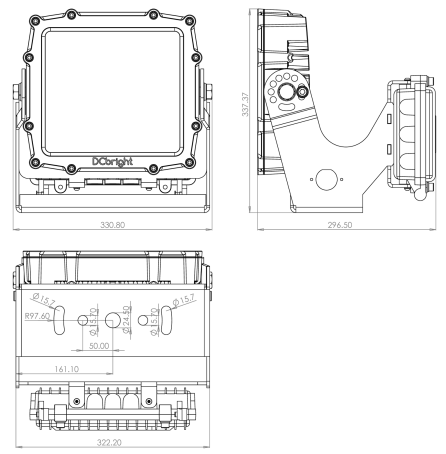

Rear mount bracket, AC version only

REAR MOUNT BRACKET

Mounting plate	322.20 mm wide
Fixing holes	2 × Ø 15.70 mm at plus and minus 50.00 mm from the centre
Slots	2 × Ø 15.7 obround on R 97.60 mm
Cable entry	Ø 24.50 mm central
Overall with bracket	331 × 297 × 338 mm, w × d × h

DIMENSIONS

Luminaire	320 × 290 × 90 mm
With standard bracket	350.80 × 297.59 mm

MOUNTING INTERFACE

Mounting foot	319.20 × 86.50 mm
Fixing holes	3 × Ø 17.10 mm
Hole centres	249.25 mm between the outer holes
Adjustment	360 degrees in 30 degree steps

WEIGHT

Luminaire with bracket	10.1 kg
Plus loose driver	11.25 kg
Plus driver in DRB-1	14.3 kg

WIND LOAD

Frontal area, standard bracket	0.104 m²
Frontal area, rear mount	0.112 m²
Side view area	0.026 m²
Cd · A at Cd 1.2	0.125 and 0.134 m²

> **NOTE**
>
> The wind load figure is the frontal area, not the force. Multiply by the drag coefficient and the dynamic pressure for your site to get the load on the structure.

3.2 Dimensions, weight and wind load, 316L stainless steel

Solid 316L is heavier and slightly larger than the cast aluminium housing, and the bracket interface differs by a few tenths of a millimetre. Do not reuse the aluminium hole pattern without checking it.

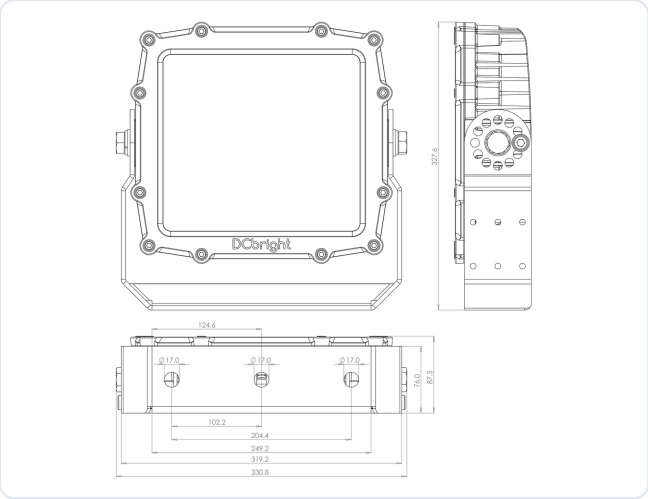

Barracuda SS with standard bracket, principal dimensions

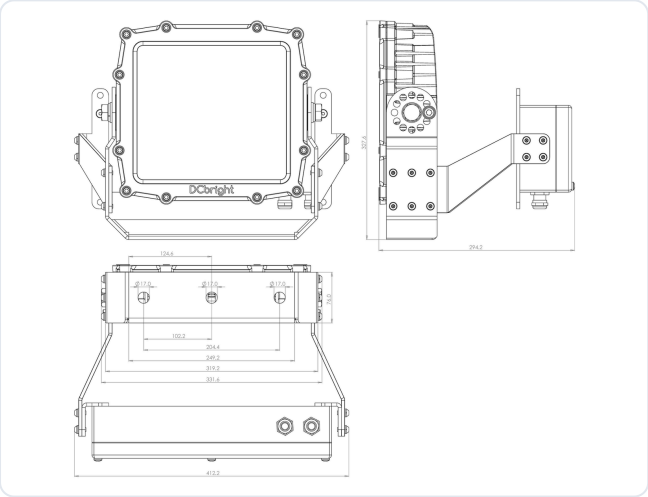

SS rear mount bracket

SS REAR MOUNT BRACKET

Mounting foot	319.20 mm
Fixing holes	3 × Ø 17.00 mm
Hole centres	249.20 mm between the outer holes
Overall with bracket	412 × 295 × 328 mm, w × d × h
Frontal wind load area	0.135 m²

DIMENSIONS

Luminaire	320 × 290 × 90 mm
With standard bracket	331 × 328 mm

MOUNTING INTERFACE

Mounting foot	319.20 × 87.50 mm
Fixing holes	3 × Ø 17.00 mm
Hole centres	249.20 mm between the outer holes
Adjustment	360 degrees in 30 degree steps

WEIGHT

Luminaire	14.3 kg
Bracket	1.7 kg
Luminaire with bracket	16.0 kg
Plus loose driver	17.2 kg
Plus driver in DRB-1	20.2 kg

WIND LOAD

Frontal area, standard bracket	0.108 m²
Frontal area, rear mount	0.135 m²
Side view area	0.026 m²
Cd · A at Cd 1.2	0.130 and 0.162 m²

> **WARNING**
>
> At 16.0 kg with the bracket and 20.2 kg with a driver box, the stainless steel version is 60 per cent heavier than the aluminium one. Check the load capacity of the structure again if you are replacing aluminium with stainless.

3.3 Dimensions and lifetime, high temperature range

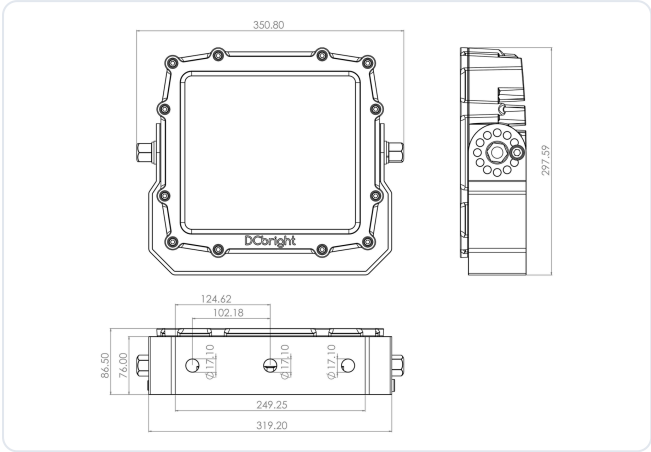

Barracuda HT, principal dimensions. Same footprint as the other families

Luminaire	320 × 290 × 90 mm, excluding bracket
Weight incl. bracket	10.1 kg cast aluminium · 16.0 kg 316L
Frontal wind load area	0.104 m² with standard bracket
Side view area	0.026 m². Cd · A at Cd 1.2 is 0.125 m²
Cable	SiHF-OB silicone, up to 150 m on request

LUMEN MAINTENANCE AT ELEVATED AMBIENT

The headline lifetime figure is measured at 50 degrees Celsius. In a hot zone the ambient governs, so use the row that matches the position, not the headline.

Ambient	TM-21 L90B05
plus 50 degrees Celsius	360,000 h
plus 85 degrees Celsius	103,000 h
plus 105 degrees Celsius	71,700 h
plus 120 degrees Celsius	51,400 h

> **NOTE**
>
> Even at plus 120 degrees Celsius continuous the LED engine outlasts more than five driver lifetimes. That is the whole point of putting the driver outside the heat. See section 7.5.

VOLTAGE EXCURSION

The HT models accept 90 to 305 VAC continuous and tolerate 380 VAC for up to two hours. That covers a supply fault, not a design choice.

3.4 Standards and verification

Subject	Standard	By
Luminaire safety	IEC/EN 60598-1, -2-5	In house
EMC emission and immunity	EN 55015, EN 61547	Third party
Ingress	IEC 60529, ISO 20653	In house
Impact	IEC 62262	In house
Vibration	IEC 60068-2-6	In house
Shock	IEC 60068-2-27	In house
Corrosion	ISO 9223, EN 1993-1-4 for 316L	In house
Photometry	IES LM-79, TM-21 for lifetime	In house
Photobiological safety	EN 62471, IEC/TR 62778	See section 4.3

This table lists how the product is verified. The harmonised standards named on the declaration of conformity are listed separately in section 14.1. To check the authenticity of a test or inspection report and certificate, contact JEL Products on +31 (0)33 785 9809 or at info@jelproducts.nl.

4 Safety

This chapter lists the hazards that arise when a Barracuda is installed, operated and maintained, and what to do about each of them. It does not replace the national and local electrical and working at height regulations that apply on your site.

4.1 Electrical hazard

DANGER, LIVE PARTS

Working on the luminaire, the driver or the driver box while the supply is on can cause death or serious injury. Isolate the supply, secure it against being switched on again, and verify that the circuit is dead before you start. Check twice.

DANGER, NEVER MAINS TO THE LUMINAIRE

An AC Barracuda is **always** fed by its driver. The luminaire itself must never be connected directly to 230 VAC, 110 VAC, 400 VAC or any other mains supply. Mains goes to the driver. The driver output goes to the luminaire. Connecting mains to the luminaire destroys it and creates a serious electrical hazard. See section 7.8.

- Every Barracuda is a Class II luminaire. The housing is not earthed through the supply cable, but the driver box, driver tray and any metal enclosure must be earthed correctly.
- Only use the driver and the cable supplied for that luminaire. Another driver can create a dangerous situation, will cause a malfunction, and voids the warranty.
- Make the connection to the standards and directives that apply in your country, within the supply range in chapter 3 and of the right type, AC or DC.
- Provide surge protection where the installation is exposed to lightning or to switching transients.

4.2 Falling objects

WARNING, FALLING LUMINAIRE

A luminaire that comes loose from height can kill. Verify the load capacity of the mast, bracket or structure before mounting, and fit a secondary retention where the luminaire is above a walkway, a working area, a road, or on anything that moves.

The luminaire and bracket weigh 10.1 kg in cast aluminium and 16.0 kg in 316L, and up to 20.2 kg with a driver box. Under EN 60598-1 the suspension has to withstand four times the mass of the luminaire. Where the load capacity of the structure is not known, have it calculated and checked by a competent party.

4.3 Optical radiation

WARNING, OPTICAL RADIATION

Never look into the operating light source, at any distance. Direct exposure at close range can cause permanent eye damage.

Photobiological safety is classified to **EN 62471**, with the blue light hazard of the luminaire assessed to **IEC/TR 62778**. That gives a **hazard distance**: beyond it the luminaire is Risk Group 1 and no exposure limit is reached in normal viewing.

It follows the optic, because it is set by the peak intensity and not by the light output. The figures below come from our own LM-63 photometric files, 320 W AC version.

Optic	Peak intensity	Hazard distance
13 degrees	499,000 cd	**12 m**
14 × 46 degrees	190,000 cd	7.4 m
38 degrees	87,000 cd	5.0 m
69 degrees	36,000 cd	3.2 m
No optic, 133 degrees	13,000 cd	2.0 m
HT range, 60 degrees	13,000 cd	1.9 m

The rule on site. Take **12 m** whenever the optic is not known, because it covers every build. Nobody works or stands within the hazard distance looking towards the front. During aiming, wear shaded eyewear if you have to look towards a luminaire that is on.

Method: the square root of the peak intensity divided by the threshold illuminance at the Risk Group 1 boundary, taken as 3,500 lx for the 6500 K LED. The DC versions come out a few percent lower. Calculated values, not a measurement report.

4.4 Hot surfaces, high temperature range



WARNING, HOT SURFACE

A Barracuda HT in a hot zone reaches the temperature of its surroundings, up to plus 120 degrees Celsius and briefly plus 130. Touching it causes immediate and severe burns. It stays hot long after the supply is switched off.

- Isolate the supply and let the luminaire cool to hand temperature before any work. Do not judge the temperature by looking at it.
- Wear heat resistant gloves and the personal protective equipment required for that zone.
- Never run cold water onto hot glass. The thermal shock can break the front. See section 10.5.
- Do not apply water at all to a luminaire warmer than plus 60 degrees Celsius.
- The aluminium and stainless steel families also become warm in service, but stay within the range that a bare hand tolerates briefly. Let them cool anyway.

4.5 Crush and handling

CAUTION, MOVING PARTS

The housing rotates against the bracket during mounting and aiming. Keep fingers clear of the pivot. Two people on the stainless steel version at 16.0 kg.

- Wear gloves, safety boots and a hard hat during assembly and installation.
- Handle the luminaire with two people where the position, the height or the working platform makes single handed work unsafe.

4.6 Heat and surroundings

- Keep at least 75 mm clear between the luminaire and thermal insulation or building parts. Do not cover or wrap the luminaire. Direct ceiling mounting is not recommended.
- Keep the space between the cooling fins clear. Trapped dirt reduces cooling and shortens the life of the LEDs.
- Do not install an aluminium or stainless steel Barracuda near a heat source that takes it beyond plus 50 degrees Celsius ambient. For process heat, use the high temperature range.
- Do not expose the luminaire to corrosive chemicals outside its corrosion class without checking with your supplier first.
- Keep at least one metre between the luminaire and a radio receiver.

4.7 Laying the luminaire down

CAUTION

Rest the luminaire on its **front** or on its side, on the packaging or on a clean soft surface. **Never rest it on its back**, the side the cable comes out of.

The cable gland and the cable stand proud of the rear face. Put the weight of a 10 or 16 kg luminaire on them and you load the gland in exactly the direction it is not designed for: the seal is disturbed, the ingress protection is no longer guaranteed, and the damage does not show. The front is a flat glass or polycarbonate plate in a raised frame and it carries the weight without complaint. It may pick up a scratch on grit, which is cosmetic. A crushed gland is not.

4.8 What must never be done

DANGER, DO NOT OPEN THE LUMINAIRE

Do not remove the front, the glass or the lens plate, and do not open the housing. The seal, the ingress protection and the electrical safety all depend on a housing that has not been opened. Opening it voids the warranty and the declaration of conformity.

- Do not modify, repair or open the luminaire. Repairs are carried out by JEL Products or by a company it appoints.
- Do not install or switch on a luminaire with a cracked front, a damaged housing, bracket or cable, and do not use it in the applications listed in section 2.3.
- Do not connect mains directly to an AC luminaire, and do not reverse the polarity on a DC luminaire.

4.9 Emergency and exceptional situations

- If an electrical fault occurs in a luminaire, a driver or a driver box, switch off the supply immediately.
- If a luminaire is severely damaged during operation, switch off the supply immediately and do not switch it on again until the luminaire has been replaced or released by JEL Products.
- No Barracuda has battery back up. None of them provides emergency or escape route lighting.

4.10 Potential health consequences

If ignored	Consequence
Working on a live luminaire, driver or box	Severe injury or death by electric shock
Mains connected directly to an AC luminaire	Destroyed luminaire, arc, fire and shock risk
Looking into the operating light source	Permanent eye damage
Touching a hot HT housing	Immediate severe burns
No secondary retention above a walkway	Fatal injury from a falling luminaire
Fingers at the pivot during aiming	Crushing, minor to moderate injury
Cold water on hot glass	Broken front, glass fragments, loss of ingress protection
Luminaire rested on its back	Damaged gland, water ingress, later failure

NEVER, ON ANY BARRACUDA



Never open the housing or remove the front



Never rest the luminaire on its back, the cable side



Never carry or suspend it by the cable



Never aim a pressure washer at the gland



Never cover or wrap the luminaire



Never fit a driver other than the one supplied

5 Preparation

Everything that has to be right before the first bolt goes in.

5.1 Transport and storage

- Transport and store the luminaire in its original packaging, in a dry place, at **minus 45 to plus 50 degrees Celsius**. That applies to every family, including the high temperature range: the rating of plus 120 degrees Celsius is an operating rating, not a storage rating.
- Do not stack pallets beyond the marking on the packaging.
- Store the box the right way up and keep the front off the ground.

5.2 Contents of the delivery

1 ×	Barracuda luminaire in the ordered configuration, with the standard bracket fitted and a pre-fitted cable with free wire ends
1 ×	Remote driver, BLD320 or TLD320, on AC and HT versions. Bare, or in a DRB driver box or a 316L Power Box if ordered
1 ×	This instruction manual

> **NOTE, CABLE LENGTH**
>
> The length of the pre-fitted cable is not fixed. It is specified per order and varies from project to project, and on the high temperature range it runs to 150 m. **Check the length against the packing list or the quotation**, not against a figure in a manual or a datasheet.

The contents change with the accessories ordered: rear mount bracket, retrofit bracket, boom or tenon mount, safety cable, Crane Light Stabilizer or crane boom lighting frame. Mounting bolts for the structure are not supplied, because they depend on the structure. The safety cable is not supplied as standard, see section 6.5.

5.3 Unpacking

1. Read the label on the box and check that the article code matches what you ordered and what the lighting design specifies. Optics and colour temperatures differ between luminaires on the same project.
2. Cut the tape along the seams. Do not push the knife deeper than the tape.
3. Lift the luminaire out with both hands, holding the housing and not the cable. Two people for the stainless steel version.
4. Check that the article code on the type label matches the code on the box, and note the internal production code as well, see section 2.5.
5. Inspect the housing, the front, the bracket, the cable and the cable gland for cracks, impact damage or exposed conductors.
6. Keep the packaging until the luminaire is installed and working. A luminaire that has to be returned travels in its own box.

> **WARNING, DAMAGED PRODUCT**
>
> If you find any damage, do not install the luminaire and do not switch it on. Contact JEL Products.

5.4 Tools

The sizes follow the bolts you use for the structure, so the list names the bolt and not a spanner size. Bring a socket or ring spanner that fits the bolt you have chosen.

Tool	Used for
Socket or ring spanner for M8	The two bolts that hold the housing to the bracket
Socket or ring spanner for the structure bolts	M16, M20 or M24, whichever the structure calls for
Torque wrench, 5 to 30 Nm	M8 bolts and the cable gland
Torque wrench up to 350 Nm or more	The bracket bolts, see section 6.6
Two open ended spanners for the cable gland	One holds the body, one turns the cap nut
Wire stripper and cutter	Preparing the cable ends
End sleeve crimping tool	Preparing the cable ends
Voltage tester	Verifying that the circuit is dead
Insulation resistance tester	Commissioning, chapter 8
Heat gun	Heat shrink tubing over the gland, section 7.6
NFC reader or smartphone with the driver app	Setting the output level over NFC, where fitted
Heat resistant gloves	Any work in a hot zone on the HT range

Do not use a percussion drill on or near the bracket.

NOT SUPPLIED WITH THE LUMINAIRE

Mounting bolts	They depend on the structure. Use A4 or 316 stainless steel, or hot dip galvanised class 8.8, matched to the environment
Safety cable	Ordered separately, see section 6.5
Cable gland for an extended run	Where the run is extended on site
Heat shrink tubing and self amalgamating tape	For sealing the gland, section 7.6
Anti-seize compound	For a stainless bolt in a stainless thread, section 6.6
Threadlocker	Where the installation calls for it

> **NOTE**
>
> The reason the tool list names bolts and not spanner sizes is that the bolt is your choice, not ours. The bracket has three holes of 17 mm and what goes through them follows from the structure and the wind load.

TWO PEOPLE OR ONE

A cast aluminium Barracuda with bracket is 10.1 kg and one person can hold it while the bolts go in. A 316L version is 16.0 kg, and with a driver box on the structure the assembly reaches 20.2 kg. On a ladder or a narrow platform, plan for two.

6 Mechanical mounting

Every Barracuda is delivered with the standard bracket fitted. Mount the bracket to the structure first, then set the angle, then make the electrical connection. The procedure is identical for all three families; only the hole pattern and the weight differ.

DANGER

Isolate the supply and secure it against being switched on again before you start. Installation may only be carried out by a qualified person.

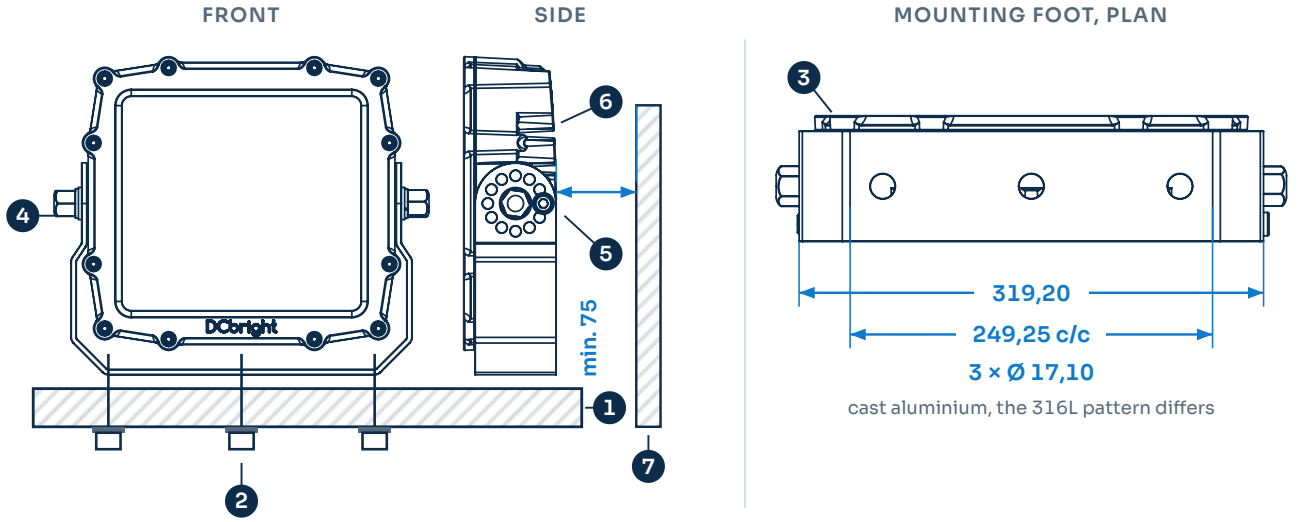

Mounting principle. The three views are the production drawing of the cast aluminium version, all to the same scale, including the clearance behind. The 316L hole pattern differs by a few tenths of a millimetre, see section 3.2

1. Load bearing structure. Verify its capacity for the weight in chapter 3 plus the wind load
2. Bolts through the fixing holes, a washer under each nut, tightened to **341 Nm** for M20 class 8.8. At least two bolts must be used
3. Bracket mounting foot, 319.20 × 86.50 mm, three holes Ø 17.10 mm at 249.25 mm centres. The plan view is the pattern to mark out
4. Pivot bolt, **M8 at 20 Nm**, one on each side. Loosen both to set the aiming angle, then retighten
5. Index bolt in the detent ring. The ring has twelve holes, and that is where the 30 degree steps come from. Move the index bolt to the hole for the angle you need
6. Cooling fin field on the rear, with the cable gland in the middle of it. Route the cable clear of the fins and clamp it so that no load reaches the gland
7. Minimum **75 mm** free space behind the fin field, drawn here to scale. Keep it clear over the whole field

BEFORE YOU GO UP

- The lighting design is on site, with the position, angle and optic per luminaire.
- The mounting surface is clean, flat and suitable for the mounting method.
- The load capacity of the structure is known and sufficient for the weight in chapter 3 plus the wind load.
- Mounting hardware is certified and suited to the environment: A4 or 316 stainless steel, or hot dip galvanised class 8.8.
- HT range: the driver position outside the hot zone is chosen and reachable, section 7.5.
- The supply circuit can be isolated and secured. Start as close as possible to the point of supply.

6.1 Standard bracket

1. **Check the position.** Follow the lighting design. Check that the mounting surface is flat, clean and free of obstructions, and that the structure carries the load.
2. **Mark and prepare the holes.** Use the hole pattern for your family, opposite. Do not use a percussion drill.
3. **Fit the bracket.** At least two bolts, a washer under each nut. A4 or 316 stainless steel, or hot dip galvanised class 8.8.
4. **Tighten to the torque** in section 6.6, with a torque wrench.
5. **Set the aiming angle.** Loosen the two M8 bolts, turn the housing to the required angle, retighten. The bracket rotates through 360 degrees in steps of 30.
6. **Check the tilt.** Do not tilt more than fifteen degrees above the design angle. Beyond that the upward light output ratio is no longer nil, see section 6.7.
7. **Fit the secondary retention** if section 6.5 applies.

> **CAUTION, CRUSH HAZARD**
> The housing swings freely once the pivot bolts are loose. Support the housing with one hand while you set the angle, and use two people on the stainless steel version.

HOLE PATTERN PER FAMILY

	Aluminium and HT	316L SS
Mounting foot	319.20 × 86.50 mm	319.20 × 87.50 mm
Fixing holes	3 × Ø 17.10 mm	3 × Ø 17.00 mm
Hole centres	249.25 mm	249.20 mm
Adjustment	360 degrees in 30 degree steps	
Weight to carry	10.1 kg	16.0 kg

> **NOTE**
> The two patterns are close but not identical. If you are replacing an aluminium luminaire with a stainless one, check the holes before you drill, and check the load again.

AFTER MOUNTING, BEFORE WIRING

- [ ] All bracket bolts tightened to torque and marked.
- [ ] Housing angle set and pivot bolts tightened.
- [ ] Secondary retention fitted where required.
- [ ] Cable is free, is not under tension, and does not carry any part of the weight of the luminaire.
- [ ] Cable is supported and clamped so that movement cannot be transmitted to the gland or to the terminations.
- [ ] Nothing obstructs the cooling fins on the rear.
- [ ] HT only: the driver sits outside the hot zone.

6.2 The three mounting configurations

Which one you have follows from the order code and the accessories. All three are available on the aluminium and stainless steel families. On the high temperature range the standard bracket is the normal choice, because the driver has to sit outside the hot zone anyway.



Standard bracket. High tensile 316L, turns through 360 degrees in steps of 30. Driver remote, in a driver box elsewhere



Rear mount bracket. AC only. Flat against a structure, with the driver carried on the back of the luminaire



Crane Light Stabilizer. For a crane boom. The swing arm keeps the luminaire level while the boom moves

6.3 Rear mount bracket, AC versions

The rear mount bracket sets the luminaire flat against a structure, with the driver carried on the back. Mount the plate first, then the luminaire, then set the angle as in step 5 of section 6.1. The dimensions are in section 3.1 for the aluminium version and 3.2 for the stainless steel version, which differs.

> **NOTE**
> With the rear mount bracket the frontal wind load area rises, from 0.104 to 0.112 m² in aluminium and from 0.108 to 0.135 m² in stainless steel. On a high mast that difference is worth checking.

6.4 Other mounting options

Option	Note
Retrofit bracket	On request, codes are issued per structure
Boom and tenon mount	On request
Crane Light Stabilizer	AC and DC, for crane boom mounting
Crane boom lighting frame	AC versions

> **WARNING**
> On anything that moves, a crane boom, a mobile mast, a vehicle or a vessel, the secondary retention in section 6.5 is not optional.

> **NOTE**
> The Crane Light Stabilizer and the crane boom lighting frame have their own documentation, because the frame carries several luminaires and a distribution unit. Ask JEL Products for the set that matches your boom length.

6.5 Secondary retention

WARNING

Fit a secondary retention wherever the luminaire is mounted above a walkway, a working area or a road, and always on anything that moves: a crane boom, a mobile mast, a vehicle or a vessel.

NOTE, THE SAFETY CABLE IS AN ORDERED ITEM

The safety cable is **not supplied as standard**. It must be ordered separately. There are several variants, matched to the housing and to the weight: the 316L stainless steel version uses a different cable from the aluminium version. State the luminaire type when you order it.

Length	1 m
Rating	Matched to the weight of the luminaire it is supplied for
Variants	Per housing material. The 316L version has its own cable
Supply	Ordered separately, not part of the standard delivery

1. Choose an anchor point on the structure that is independent of the bracket fixing and that carries four times the mass of the luminaire.
2. Loop the safety cable around that anchor point. At 1 m the cable is short, so the anchor has to be close to the luminaire. Pick it before you mount the bracket.
3. Attach the other end to the luminaire bracket, not to the housing and not to the cable.
4. Leave a little slack, enough to allow the aiming to be adjusted later, but not so much that the luminaire can gather speed if the main fixing fails.
5. Record the safety cable in the installation documentation, so that it is inspected at every maintenance visit.

DANGER

Do not substitute a cable, chain or strap of your own without having it rated. The supplied cable is matched to the mass of that luminaire and to a drop of one metre. A longer cable turns a drop into a swing.

6.6 Tightening torques

Use a torque wrench. Overtightening a stainless steel bolt in a stainless steel thread causes galling and the joint cannot be undone afterwards. Undertightening lets the joint work loose under vibration, and the Barracuda is qualified to 6 G at resonant frequency.

Connection	Size	Torque
Bolts on the luminaire	M8	20 Nm
Bolts on the bracket, class 8.8	M16	175 Nm
Bolts on the bracket, class 8.8	M20	341 Nm
Bolts on the bracket, class 8.8	M24	590 Nm
Bolts on the bracket, class 12.9	M20	576 Nm
Bolts on the bracket, class 12.9	M24	995 Nm

Torques apply to clean, dry, undamaged threads. For a stainless steel bolt in a stainless steel thread, use an anti-seize compound suitable for stainless steel and reduce the torque according to the compound manufacturer. Where the mounting hardware comes from another supplier, that supplier's torque takes precedence.

6.7 Aiming and obtrusive light

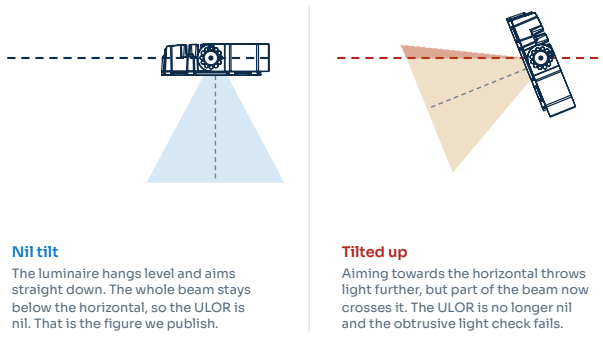

The bracket turns through 360 degrees in steps of 30. What tilting costs you

Nil tilt means the luminaire hangs level and aims straight down. In that position the upward light output ratio is nil. That is the figure a permitting authority asks for when a terminal borders a residential area or a protected zone, and it is the starting point for an assessment against NEN-EN 12464-2 and the NSVV guidance on obtrusive light.

Every degree away from straight down eats into that figure, and beyond a certain angle the beam crosses the horizontal. Aim from the lighting design. Where no design is available, keep the tilt at or below fifteen degrees from straight down and have the result verified.

7 Electrical installation

DANGER, LIVE PARTS

Isolate the supply, secure it against being switched on again, and verify that the circuit is dead. Only a qualified person may make the electrical connection.

7.1 Architecture, all AC versions

On every AC Barracuda the driver sits outside the luminaire. Mains arrives at connector 1 in the driver box, the driver feeds connector 2, and cable 2 carries the driver output and the dimming signal to the luminaire. That is why a driver fault is a ground level job.

ONE DIAGRAM FOR EVERY AC VERSION

The diagram below applies to **all** AC versions of the Barracuda: the cast aluminium BAAC01, the stainless steel BASS01 in its AC build, and every high temperature model BAHT01 to BAHT04. The conductor count, the colours, the connectors and the terminal numbering are the same. Only the cable type differs, H07BQ-F on the aluminium and stainless versions and SiHF-OB silicone on the high temperature range.

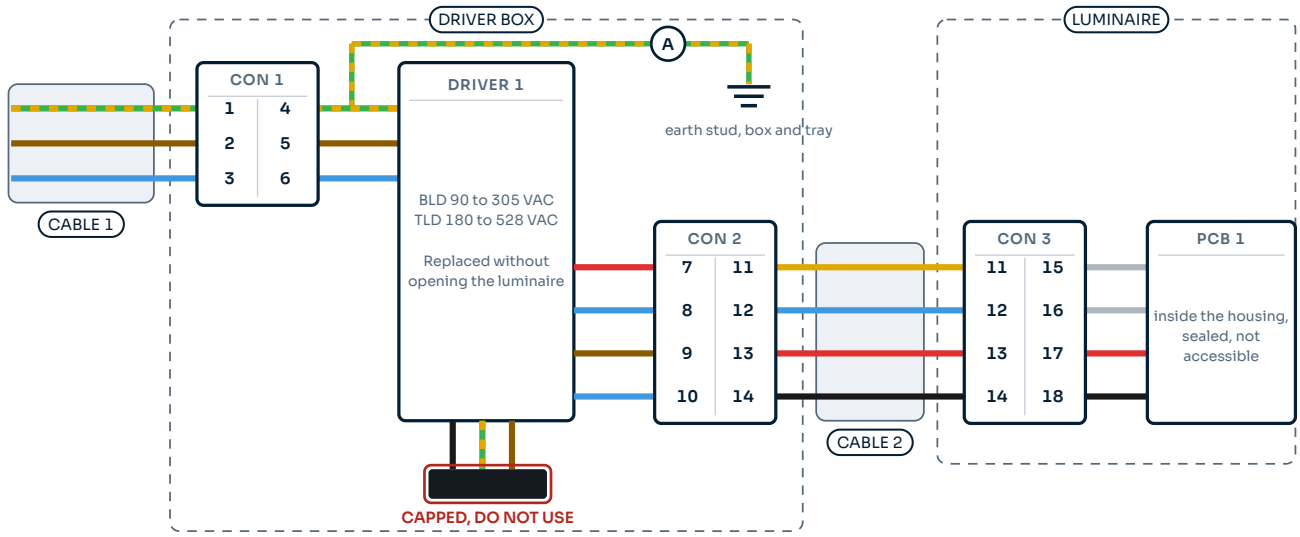

CABLE 1, mains	1 green and yellow earth · 2 brown phase · 3 blue phase or neutral. Mains voltage
DRIVER to CON 2	7 red TEMP + · 8 blue TEMP – · 9 brown DRI OUT + · 10 blue DRI OUT –
CABLE 2	11 yellow TEMP + · 12 blue TEMP – · 13 red DRI OUT + · 14 black DRI OUT –. No mains, no earth
CON 3 to PCB 1	15 grey · 16 grey · 17 red DRI OUT + · 18 black DRI OUT –
A	The incoming earth conductor lands on the earth stud of the driver box, and earths the box and the tray. The luminaire is Class II and is not earthed
CAPPED	**The black, green and brown conductors on the driver are capped off and are not connected. Do not use them**

Every conductor, colour and terminal number as on the production drawing. Cable 1 carries mains, cable 2 carries the driver output and the temperature feedback, and the luminaire never sees mains voltage

DANGER, THE CAPPED CONDUCTORS ARE NOT SPARE WIRES

The driver leaves the factory with **three capped conductors: black, green and brown**, part of the driver control lead and **not connected on purpose**. Leave the cap in place and do not use them as an earth, a neutral or a spare core. Adding dimming later is a driver change, done by JEL Products or by a qualified person with the driver documentation.

The incoming **earth conductor lands on the earth stud of the driver box**, marked **A**, and earths the box and the tray. Cable 2 carries no protective earth and the luminaire itself is not earthed: the driver sits outside the housing, so the luminaire is Class II.

This diagram applies to models from 2025 onward. For an older luminaire, check the connection against the diagram supplied with it before you rewire anything.

7.2 Conductors, all AC versions

Cable 1 runs from the grid to connector 1 inside the driver box. Cable 2 runs from connector 2 in the driver box to the luminaire. Connector 3 and the printed circuit board are inside the luminaire. The numbers match the diagram in section 7.1.

No	Colour	From, to	Function
1	Green and yellow	Incoming cable to CON 1	Earth
2	Brown	Incoming cable to CON 1	Phase
3	Blue	Incoming cable to CON 1	Phase or neutral
4	Green and yellow	CON 1 to driver 1	Earth
5	Brown	CON 1 to driver 1	Phase
6	Blue	CON 1 to driver 1	Phase or neutral
7	Red	Driver 1 to CON 2	Temperature, plus, NTC plus
8	Blue	Driver 1 to CON 2	Temperature, minus, NTC minus
9	Brown	Driver 1 to CON 2	Driver output, plus
10	Blue	Driver 1 to CON 2	Driver output, minus
11	Yellow	CON 2 to CON 3	Temperature, plus
12	Blue	CON 2 to CON 3	Temperature, minus
13	Red	CON 2 to CON 3	Driver output, plus
14	Black	CON 2 to CON 3	Driver output, minus
15	Grey	CON 3 to PCB	Dimming signal, plus
16	Grey	CON 3 to PCB	Dimming signal, minus
17	Red	CON 3 to PCB	Driver output, plus
18	Black	CON 3 to PCB	Driver output, minus

Conductors 7 and 8 are the temperature sense pair from the driver. Grey is the dimming pair, conductors 15 and 16, and nothing else. An older manual listed 7 as black or white and 8 as grey. That was wrong, and the diagram in section 7.1 is the reference.



Remote driver BLD320 or TLD320, and the DRB-1 driver box

WARNING

One conductor per terminal entry point. Two conductors in one terminal is a loose connection waiting to happen, and at 320 W it gets hot.

7.3 Circuit breakers

Maximum number of luminaires on one miniature circuit breaker, the manufacturer figure for ABB S200 at 220 V. A guide for the engineering phase, not a substitute for the installation calculation.

MCB	BLD320	TLD320
B16	2	4
C16	4	7
C25	7	11
D16	8	8

Inrush is what limits the count: 31.2 A peak with a T50 of 1.3 ms for the BLD320, and 64 A peak with a T50 of 400 microseconds for the TLD320. The HT models use the BLD320, so the BLD320 column applies to them as well.

NOTE

Where a residual current device is fitted, size it for the leakage current of all luminaires on the circuit together. One Barracuda draws at most 0.7 mA.

7.4 Architecture, all DC versions

The DC versions have their drivers on board. There is no external driver and no driver box. A two core cable carries 24 V from the distribution to the luminaire, and that is the installation.

ONE DIAGRAM FOR EVERY DC VERSION

The diagram below applies to **all** DC versions: the cast aluminium BADC01 and the stainless steel BASS01 in its DC build. Red is plus and black is minus on every one of them, the two cores go straight to the board, and there is no connector block and no earth conductor in that cable.

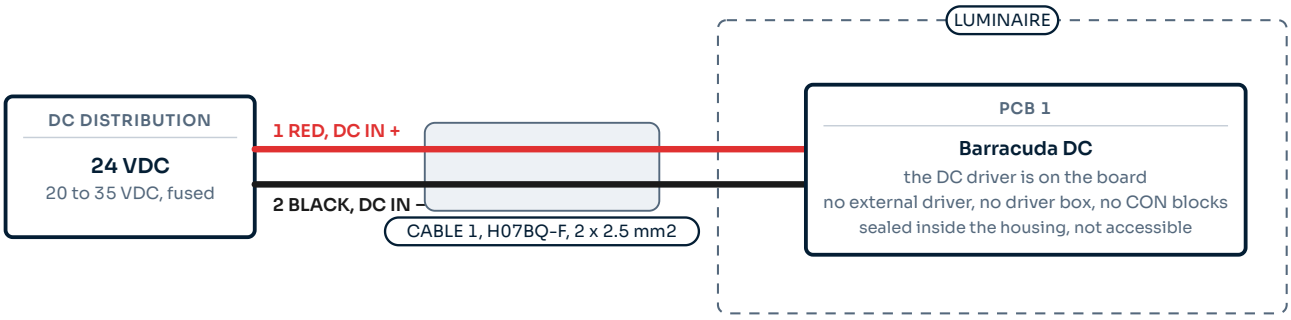

CABLE 1 1 red DC IN + · 2 black DC IN –. Two cores, no earth conductor and no control conductors
POLARITY **Reversing plus and minus does not light the luminaire and can damage the board. Check the marking at both cable ends**
CLASS II No protective earth conductor runs to the luminaire. Earth the DC distribution and any metal enclosure per the installation

Never connect a DC luminaire to an AC supply, and never connect an AC luminaire to mains without its driver.

CONDUCTORS, DC VERSIONS

No	Colour	Function
1	Red	DC IN plus, 20 to 35 VDC, 24 V nominal
2	Black	DC IN minus

Cable as supplied: H07BQ-F, 2 cores of 2.5 mm², with free wire ends. The two cores go straight to the board. There is no connector block and no earth conductor in this cable. **Red and black apply to every DC luminaire in the JEL range**, so the colour code is the same whichever product you are working on.

Supply	20 to 35 VDC
Current draw	13.4 A at 24 V
Luminous flux	40,800 lm at 320 W
Driver	On board, not replaceable in the field
Dimming	Custom, see chapter 9
Protection class	Class II

DANGER, POLARITY AND SUPPLY TYPE

Never connect a DC luminaire to an AC supply. Never connect an AC luminaire to a DC supply. Never reverse the polarity on a DC luminaire. Each of these destroys the luminaire and none of them is covered by the warranty.

WARNING, THE CURRENT IS WHAT LIMITS THE RUN

At 13.4 A the DC version draws roughly nine times the current of the AC version at 220 V. The cable run is short unless the cross section goes up. See section 7.7.

ON BOARD DRIVER

A driver fault on a DC luminaire is not a ground level repair. The luminaire is exchanged. That is the trade the DC version makes for needing no driver box and no mains at the mast.

The DC version is the usual choice on vessels and mobile plant. On a fixed installation with mains available, the AC version with its serviceable remote driver is normally the better choice.

7.5 The high temperature system

Standard industrial LED luminaires stop at roughly plus 50 degrees Celsius, because the driver does. In virtually every failure of LED lighting in a hot environment, the driver gives up first. The HT range is therefore a system in two parts: the heat resistant luminaire in the hot zone, and the driver outside it.

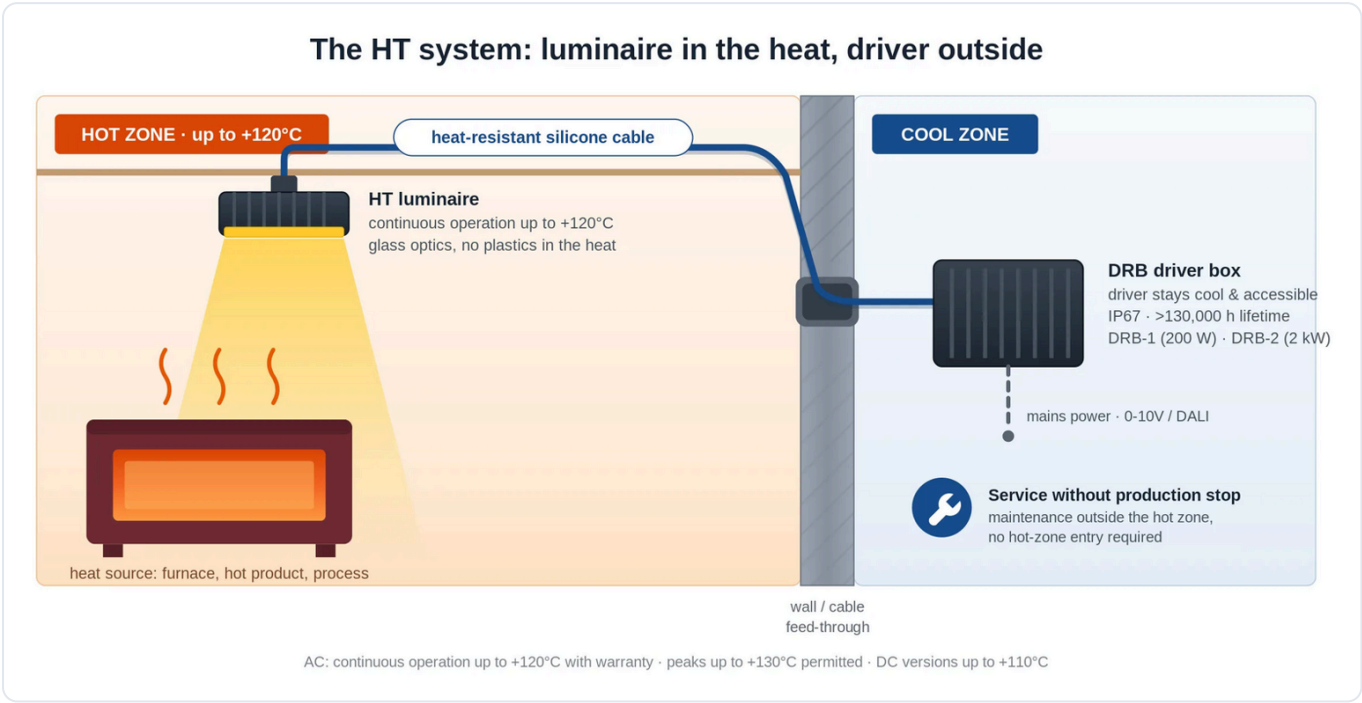

The luminaire in the heat, the driver outside it, joined by heat resistant silicone cable

What this means on site

1. **Choose the driver position first, not last.** It must be outside the hot zone, within minus 40 to plus 50 degrees Celsius ambient, and reachable from the ground or from a platform. Everything else follows from that choice.
2. **Measure the run.** The silicone cable is specified per order and runs to 150 m. Confirm the length on the packing list before you start pulling.
3. **Use only the silicone cable supplied.** SiHF-OB is rated for the temperature in the hot zone. An H07BQ-F cable is not, and it will fail at the gland end first.
4. **Keep the cable off hot surfaces.** Rated for the ambient does not mean rated for contact with a furnace wall.
5. **Fit the driver in a DRB-1 or DRB-2** where the position is exposed, or leave it bare in an existing enclosure that meets the ingress requirement.

> **DANGER**
>
> Never install the driver in the hot zone, in a cable duct that passes through it, or above a heat source where convection carries the heat up to it. A driver failure in a hot zone is a fire risk as well as a light failure.

THE HT SYSTEM

Luminaire ambient	minus 45 to plus 120 °C continuous, peaks to plus 130
Driver ambient	minus 40 to plus 50 °C, outside the hot zone
Cable	SiHF-OB heat resistant silicone, up to 150 m
Driver	BLD320, remote, always
Front	Chemically hardened or borosilicate glass
Radiant heat	IR-reflective print as standard, so radiant heat is reflected instead of absorbed
Ingress	IP66, IP67, IP68 to 5 m, IP69K

> **NOTE, THE IR PRINT**
>
> The gold coloured print on the front plate of an HT luminaire is not decoration. It reflects radiant heat from the process instead of absorbing it, and that is what keeps the LED junction temperature down next to a casting platform. Do not attempt to clean it off, and do not abrade the front. See section 10.4.

At plus 120 degrees Celsius continuous the LED engine still reaches 51,400 hours to L90B05. A driver at the same temperature would not reach a fraction of that.

7.6 Cable glands

Tighten the cap nut of the cable gland to the dimension in the table, measured over the gland. That is a more reliable instruction on a mast than a torque figure, because the gland is usually tightened by hand with a spanner and no torque wrench fits. Then apply heat shrink tubing and self amalgamating tape over the gland to seal against moisture and dust.

Dimension L runs from the face of the housing to the end of the cap nut, with the cable fitted. It is not the thread length.

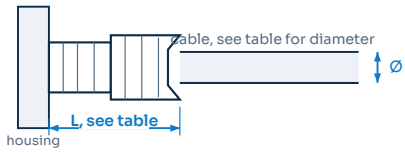

Where dimension L is measured

Cable	M12×1.5 -D-SI 4 to 8	M20×1.5 -2H 4 to 8	M20×1.5 -H 5 to 10	M20×1.5 6 to 12	M20×1.5 -D 8 to 14
H07BQ-F 4G0.5 mm², Ø 6.7 mm	17.7 mm	19.8 mm	n/a	n/a	n/a
H07BQ-F 2G2 mm², Ø 7.3 mm	18.4 mm	19.9 mm	n/a	n/a	n/a
H07BQ-F 2G1.5 + 2G0.5 mm², Ø 8 mm	18.9 mm	20.0 mm	20.4 mm	n/a	n/a
H07BQ-F 4G1.5 + 2G0.5 mm², Ø 10.4 mm	n/a	n/a	21.3 mm	22.2 mm	n/a
H07BQ-F 6G1.5 + 2G0.5 mm², Ø 13.6 mm	n/a	n/a	n/a	n/a	20.8 mm
H07BQ-F 2G2.5 + 2G0.5 mm², Ø 9.5 mm	n/a	n/a	21.1 mm	n/a	n/a
H07BQ-F 4G2.5 + 2G0.5 mm², Ø 12.3 mm	n/a	n/a	n/a	n/a	21.0 mm
H07BQ-F 6G2.5 + 2G0.5 mm², Ø 13.8 mm	n/a	n/a	n/a	n/a	21.1 mm
SiHF-08 2×1 mm², Ø 7.9 mm	18.9 mm	20.0 mm	n/a	n/a	n/a
SiHF-08 2×2.5 + 2×0.5 mm², Ø 10.7 mm	n/a	n/a	21.3 mm	n/a	n/a
EPDM H07RN-F 3G1.5 mm², Ø 10 mm	n/a	n/a	21.3 mm	n/a	n/a

Dimensions are measured over the assembled gland. Here n/a means the combination is outside the clamping range of that gland and must not be used. Where a cable and a gland do not appear together in this table, ask JEL Products before you fit them.

7.7 Cable length and voltage drop

The cable as supplied is specified per order, see section 5.2. Where the run is extended on site, the voltage drop between the source and the luminaire must not exceed 2 V.

Both circuits are low voltage DC: the driver output to an AC luminaire is **50 VDC**, the supply to a DC luminaire is 24 VDC. Neither of them carries mains.

AC VERSIONS, DRIVER OUTPUT TO LUMINAIRE, 50 VDC

Cross section	320 W 6.4 A	240 W 4.8 A	HT 120 W 2.4 A
2.5 mm²	22 m	30 m	60 m
4 mm²	36 m	48 m	95 m
6 mm²	54 m	71 m	143 m
10 mm²	89 m	119 m	238 m
16 mm²	143 m	190 m	381 m

DC VERSIONS, 24 VDC, 13.4 A

Cross section	Maximum length
2.5 mm²	10 m
4 mm²	17 m
6 mm²	25 m
10 mm²	42 m
16 mm²	68 m

All lengths are the maximum at a 2 V drop, copper, two conductors, one way. Where the installation calls for a tighter limit than 2 V, size the cross section on that limit.

On the high temperature range the silicone cable reaches 150 m, see section 7.5. At that length the cross section has to be **6 mm²** to stay within 2 V; at 4 mm² the drop is 3.1 V, or 6 percent of the 50 V output.

7.8 Making the connection

DANGER, MAINS NEVER GOES TO THE LUMINAIRE

On an AC Barracuda, **mains goes to the driver and the driver output goes to the luminaire**. The luminaire itself must never be connected directly to 230 VAC, 110 VAC, 400 VAC or any other mains supply, not even briefly and not even to test it. The luminaire runs on the driver output, which is not mains voltage. Connecting mains to the luminaire destroys it immediately and creates a serious electrical hazard.

1. Confirm the circuit is dead and secured.
2. Mount the driver or the driver box outside the wash down zone, in a position with an ambient between **minus 40 and plus 50 degrees Celsius**, and reachable from the ground or from a platform. On the HT range that means outside the hot zone, see section 7.5.
3. Earth the driver box, the driver tray and any metal enclosure. Use the earth clamp or the pre-installed earth conductor.
4. Strip and terminate the conductors according to the table in section 7.2, or section 7.4 for a DC luminaire. Use end sleeves. One conductor per terminal.
5. Keep the dimming conductors separated from the mains conductors.
6. Tighten the cable glands to dimension L in the table in section 7.6, then seal with heat shrink tubing and self amalgamating tape.
7. Support and clamp the cable so that no load reaches the gland or the terminations.
8. Close the driver box. Check that the seal is in place and undamaged and that no conductor is pinched.

The driver case temperature may reach plus 90 degrees Celsius in service and its lifetime figure is quoted at a case temperature of 75 degrees Celsius. That is the temperature of the metal case, not of the air around it. You position the driver by the **ambient**, and the ambient limit is plus 50 degrees Celsius.

8 Commissioning

Do not switch on until every item below has been checked. Most warranty cases that turn out not to be a product fault are traced back to a step that was skipped here.

8.1 Checks before switching on

- [ ] Environmental conditions are within the range for that family, chapter 3.
- [ ] No broken mechanical parts: front, housing, bolts, bracket, gland.
- [ ] Cable and glands show no breach of insulation and no exposed conductor.
- [ ] All bolted connections tightened to the torque in section 6.6.
- [ ] Secondary retention fitted where section 6.5 requires it.
- [ ] **AC only:** the luminaire is fed from the driver output and not from mains.
- [ ] **DC only:** polarity checked, red to plus and black to minus.
- [ ] **HT only:** the driver sits outside the hot zone, within plus 50 degrees Celsius ambient.
- [ ] Driver box closed, seal intact, no pinched conductor.
- [ ] Earthing verified at the furthest point of the earthing system by a competent person, per local legislation.
- [ ] Supply voltage measured and within range, and of the right type, AC or DC.
- [ ] Circuit breaker sized, and the number of luminaires per breaker within section 7.3.
- [ ] No thermal insulation or building part within 75 mm, cooling fins clear.

8.2 First power up

1. Restore the supply.
2. Confirm that the luminaire illuminates. Do not look into the light source, see section 4.3.
3. Check that the light lands where the design says it should.
4. Correct the aiming if required: isolate, loosen the pivot bolts, adjust, retighten to torque, restore the supply, check again.
5. Record the installation: both codes from the label, position, optic, colour temperature, aiming angle, date and installer. That record is what makes a later fault report useful.

8.3 Handover

Leave this manual with the site documentation, together with the record from step 5 of section 8.2 and the lighting design.

> **WARNING**
> Never adjust, open or work on the luminaire while it is energised. Isolate first, every time.

> **NOTE**
> On a project with several optics or several families, mark the position of each luminaire on the drawing. A Barracuda HT and a Barracuda SS look different, but a 14 degree and a 38 degree optic in the same aluminium housing do not.

9 Operation and dimming

9.1 Normal operation

A Barracuda needs no operator action in normal service. It switches with the circuit and reaches full output immediately.

9.2 What each version accepts

Control is not the same across the range, and part of it is built to order. The table is what is available per family, not what is fitted to your luminaire. **What your luminaire actually accepts is set at order and is stated on the quotation.**

Method	Aluminium and SS, AC	DC versions	High temperature
0 to 10 V	Standard	Custom	Standard
DALI-2	Optional	Custom	Optional
NFC	Optional	Not available	Optional
PWM	Custom in most builds	Custom	Optional
LoRa Mesh	On request	Not available	Optional
Not dimmable	Available on every family, and the default where no control is specified		

> **NOTE**
>
> Do not assume a protocol is present because the range offers it. Sending a DALI signal to a luminaire built for 0 to 10 V does nothing, and wiring a control pair into a non dimmable build does nothing either. Check the quotation, or read the driver over NFC where that is fitted.

0 to 10 V	Analogue. Two dimming conductors, kept separate from the mains conductors along the whole run
PWM	Pulse width over the same two conductors. Usually a custom build
DALI-2	Addressable. For a site with a night regime or a lighting management system
NFC	The output level is written into the driver with an NFC reader or a smartphone, without power and without control wiring. Useful where one luminaire in a row has to be turned down

9.3 Bi-colour and amber

A bi-colour build switches between 4000 K and amber 2200 K, for a site with a night regime or a light sensitive surrounding. The switching is part of the control design and is described in the project documentation, not here.

9.4 What the luminaire does not do

- It does not report its own status. There is no feedback channel on 0 to 10 V or PWM, and a luminaire that is off looks the same as one that has failed.
- It does not switch itself. Time control, daylight control and presence detection sit in the installation, not in the luminaire.
- It does not carry an emergency function. See section 4.9.

> **NOTE**
>
> On a DALI-2 build the driver does report, and that is the reason to choose it on a site large enough that walking the yard to find a dark luminaire costs more than the control gear.

10 Maintenance

DANGER

Isolate the supply and secure it before any maintenance work. Let the luminaire cool to hand temperature before touching it. On the high temperature range that takes time, and the housing gives no visual warning that it is still hot.

10.1 Interval

Environment	Interval
Normal outdoor, aluminium or stainless	Once a year
Dust, salt, exhaust or process residue	Twice a year or more
Bird fouling	As required, before the fin field closes up
Food production, normal	Weekly cleaning per the protocol in section 10.4
Food production, heavy soiling	Daily
Food production, high fat load	After every production run
Hot process zones, HT range	Every planned shutdown, never while hot

Too little cleaning shortens the life of the product. On the HT range that effect is larger, because the margin is smaller.

10.2 Inspection

- [ ] Housing, front and seals: damage, cracks, corrosion, rust.
- [ ] All fixings tight. Retighten to the torque in section 6.6.
- [ ] Bracket, mast and mounting structure sound and free of corrosion.
- [ ] Secondary retention present, intact and correctly attached.
- [ ] Cable and external wiring: damage, corrosion, loose connections, intact insulation, no exposed conductor.
- [ ] Cable gland tight and its seal effective.
- [ ] Cooling fins clear of dirt.
- [ ] Nothing has grown, been stacked or been built within 75 mm of the luminaire or in the beam.
- [ ] Aiming unchanged since installation.
- [ ] **HT only:** the IR-reflective print on the front is intact and not abraded.
- [ ] **HT only:** the driver is still outside the hot zone and nothing has been built around it.



The fin field. This is what has to stay clear

WHY THE FINS MATTER

The Barracuda has no fan and no moving part. Everything the LEDs produce leaves through this surface. Dirt between the fins raises the junction temperature, and the lifetime figures in chapter 3 assume a clean heat sink.

10.3 Records

Record every inspection, fault, repair and replacement, with both codes from the label. Under warranty, that record is the difference between a fast decision and a long discussion.

10.4 Cleaning, aluminium versions

1. Switch off the supply and let the luminaire cool.
2. Remove loose debris with a soft brush.
3. Clean the housing and the front with a soft cloth or sponge, water and a mild detergent.
4. Clear the space between the cooling fins, then dry the front with a soft cloth.

> **CAUTION**
> Do not use solvents, caustic cleaners or abrasives. Do not aim a high pressure washer at the cable gland. The luminaire is rated IP69K, but the installation around it may not be.

10.5 Cleaning, stainless steel and high temperature versions

Stainless steel and high temperature luminaires are cleaned to JEL Products protocol B5.17, version 1.0 of 27 May 2026. Written for the food industry, it is the stricter of the two procedures and applies to any stainless or HT luminaire. One exception: the HT range does tolerate steam.

BEFORE YOU START

- Switch off the supply to the luminaire.
- Let the luminaire cool to hand temperature.
- Inspect the glass, the seals, the glands, the cable and the housing for damage.

PERMITTED

Water	Clean mains water, lukewarm, maximum plus 40 degrees Celsius
Cloth	Soft microfibre cloth
Sponge	Soft sponge

NOT PERMITTED

Cleaning agents	No aggressive or chemical cleaners, no foaming agents, no solvents
Chemistry	No chlorine based, acid based or alkaline cleaners, no alcohols, no degreasers
Mechanical	No wire brushes, no abrasives, no scouring agents
Steam	No steam cleaning on a stainless steel luminaire outside the high temperature range. **On the high temperature range steam cleaning is permitted**
Pressure	No high pressure above 80 bar

PROCEDURE

1. **Pre-rinse.** Rinse the luminaire with clean water to remove loose soiling. Use a broad jet and do not hold it on the seals or the glands.
2. **Manual cleaning.** Clean the surface with a soft sponge or microfibre cloth and clean lukewarm water only.
3. **High pressure cleaning.** Maximum working pressure 80 bar. Maximum water temperature plus 40 degrees Celsius. Minimum distance 50 cm. Do not spray at right angles onto the seals for any length of time.
4. **Rinse.** Rinse the luminaire with clean water.
5. **Inspect.** Check the glass, the seals, the fixings and for any sign of moisture inside.

PREVENTING DAMAGE

> **WARNING, THERMAL SHOCK**
> Never clean hot glass with cold water. Avoid large temperature differences. **Do not apply water at all to a luminaire warmer than plus 60 degrees Celsius.** Let it cool first. On the high temperature range that is not a formality: the front can break, and it breaks towards whoever is holding the lance.

Cleaning outside these limits can damage the glass, cause leakage, attack the seals and void both the ingress classification and the warranty.

FREQUENCY

Normal production environment	Weekly
Heavy soiling	Daily
High fat load	After every production run

Source: JEL Products document B5.17, version 1.0, 27 May 2026. Ask us for the full protocol if you need it for a HACCP file.

11 Fault finding

Work through this table before reporting a fault. Isolate the supply before any action that involves touching the wiring. Most faults reported to us turn out to be one of the first five rows.

Symptom	Applies to	Probable cause	Action
No light at all	All	Supply off, breaker tripped, or a break in the run	Check the breaker and measure the supply at the driver input, or at the DC distribution
No light, supply present at the driver	AC, HT	Driver failed	Replace the driver, see section 12.3. The luminaire does not have to be opened
No light, supply present at the luminaire	DC	Reversed polarity, or an on board driver failed	Check red to plus and black to minus. If correct, the luminaire is exchanged
Luminaire destroyed on switch on	AC, HT	Mains connected directly to the luminaire instead of to the driver	Not a warranty case. Rewire per section 7.1 and replace the luminaire
Breaker trips on switch on	AC, HT	Too many luminaires on one breaker for the inrush	Reduce the number per breaker or change the characteristic, see section 7.3
Residual current device trips	AC, HT	Combined leakage current of the circuit	Split the circuit or size the device for 0.7 mA per luminaire
Flicker or unstable output	All	Loose terminal, or a dimming signal picking up interference from the mains conductors	Retighten the terminals and separate the dimming conductors from the mains conductors
Luminaire stays at partial output	AC, HT	Dimming input at a low level, or an NFC setting from a previous project	Check the control signal, then read the driver over NFC
Control signal does nothing	All	That protocol is not in this build	Check the quotation against section 9.2. Sending DALI to a 0 to 10 V build has no effect
Output visibly lower than the design	All	Dirty front or blocked cooling fins	Clean per section 10.4 or 10.5, then measure again
Part of the light field is dark	All	Wrong optic fitted for that position	Compare the article code on the type label with the lighting design
Water inside the driver box	AC, HT	Gland not tightened, seal damaged, or the box not closed correctly	Isolate, dry, replace the seal, retighten to dimension L in section 7.6 and reseal
Moisture inside the luminaire	All	Damaged gland or a luminaire that has been rested on its back	Do not open it. Return to JEL Products, see section 12.2
Corrosion on the bracket or the fixings	All	Mounting hardware not suited to a C5 or CX environment	Replace with A4 or 316 stainless steel
Corrosion on a stainless housing	SS	Deposit from carbon steel tooling or grinding dust, not the 316L itself	Clean per section 10.5. Do not use a wire brush, it makes it worse
Luminaire has moved out of aim	All	Pivot bolts loosened by vibration	Re-aim and retighten to torque. Check the secondary retention
Early driver failure, repeated	HT	The driver is not far enough outside the hot zone	Measure the ambient at the driver. It must stay below plus 50 degrees Celsius. Relocate it, see section 7.5
Broken front after cleaning	SS, HT	Cold water on hot glass, or pressure above 80 bar, or closer than 50 cm	Not a warranty case. Follow section 10.5
Output falls faster than expected	HT	Ambient at the luminaire is higher than the design assumed	Measure the ambient and compare with the lifetime table in section 3.3

If the fault is not in this table, or if the action does not resolve it, contact JEL Products with the article code and the internal production code from the type label, the position on site, the date of installation and what you have already checked. See section 2.5 for the two codes.

12 Repair and spare parts

The Barracuda is built so that the part that wears is the part you can reach. On the AC and HT versions the LEDs outlive three drivers, and the driver sits outside the housing. On the DC versions the driver is on board, and that changes the answer.

12.1 What is replaceable on site

Part	Reference	Note
Remote driver, 90 to 305 VAC	BLD320	225 × 68 × 38.5 mm, 1,120 or 1,150 g. Used on the aluminium AC, the SS AC and every HT model. Replaced without opening the luminaire
Remote driver, 180 to 528 VAC	TLD320	As above, for the high voltage AC versions
Driver box, one driver	DRB-1	276 × 194 × 86.5 mm, 4.2 kg, IP66 and IP67. Takes up to the 320 W BLD320 or TLD320, which is the largest that fits
Driver box, systems to 2,000 W	DRB-2	441 × 290 × 145 mm, 10.4 kg, IP66 and IP67
316L Power Box	Power Box BLD320	Solid 316L, 360 × 180 × 85 mm. Same driver as the DRB, chosen where the box sits in the same wash-down or salt zone as the luminaire
Standard bracket	On request	High tensile 316L. The aluminium and SS patterns differ, see section 6.1
Rear mount bracket	On request	AC versions. Separate part for aluminium and for SS
Safety cable	On request	1 m, rated to the luminaire weight. Separate variant for the 316L version. Not supplied as standard, see section 6.5
Cable assembly	On request	H07BQ-F, or SiHF-OB silicone for the HT range. Length per order

Brackets, safety cables and cable assemblies are supplied against a specification rather than a shelf article number, because they follow the structure, the housing material and the run length. State both codes from the type label and we issue the right part.

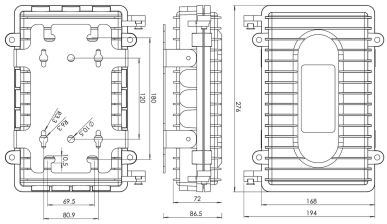

DRB-1 driver box, dimensioned drawing

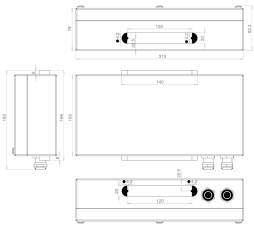

316L Power Box BLD320, for the stainless steel version in a salt or wash-down zone

Quote the article code and the internal production code from the type label in any spare part order, see section 2.5.

12.2 What is not replaceable on site

DANGER

Do not open the housing and do not remove the front, the glass or the lens plate. Opening the luminaire ends its ingress protection, its electrical safety, its warranty and its declaration of conformity.

- The light source is not replaceable in the field. At the end of its life the complete luminaire is returned or replaced.
- The optics are fitted at the factory. A change of beam angle is a change of luminaire.
- The pre-fitted cable is not replaceable in the field. If it is damaged, the luminaire returns to JEL Products.
- **On a DC luminaire the driver is on board** and is not a field part. A driver fault means the luminaire is exchanged.
- The IR-reflective print on an HT front is applied in production and cannot be renewed on site.
- Repair, overhaul and modification are carried out by JEL Products or by a company it appoints. In case of doubt, return the luminaire for inspection.

12.3 Driver replacement, AC and HT

1. Isolate the supply and secure it. Verify the circuit is dead. On the HT range, let the luminaire and the cable cool.
2. Open the driver box and photograph the wiring before you disconnect anything.
3. Disconnect the driver at CON 1 and CON 2, following the table in section 7.2.
4. Fit the replacement driver of the same type, and reconnect according to section 7.2, one conductor per terminal. A different driver is not permitted.
5. Close the box, check the seal, restore the supply and run the checks in section 8.1. Record the replacement, with the date and both codes from the label, in the site documentation.

NOTE

A BLD320 and a TLD320 are not interchangeable, and the internal production code tells us which board is in the luminaire the driver has to work with. Quote both codes.

12.4 Returning a luminaire

1. Contact JEL Products before you send anything. We will tell you whether the fault is a field repair, a driver exchange or a return.
2. Have both codes from the type label ready, plus the position on site, the date of installation and what you have already checked from chapter 11.
3. Pack the luminaire in its original box, resting on its front and never on its back.
4. On an HT luminaire, let it cool completely and state the ambient it was working in.

NOTE

Do not open a luminaire before returning it, not even to look. An opened housing changes a warranty assessment into a discussion, and the evidence we need is usually inside the seal you would break.

WHAT WE LOOK AT ON A RETURN

The internal code	Which board, which batch, which production date
The seal and the gland	Whether water got in, and from where
The driver, if returned with it	Case temperature history and failure mode
The front	Thermal shock, impact or abrasion

13 Removal and disposal

13.1 Taking the luminaire out of service

1. Isolate the supply and secure it. Verify the circuit is dead, then disconnect the luminaire at the driver box or at the DC distribution.
2. On the HT range, let the luminaire cool to hand temperature. It gives no visual warning that it is still hot.
3. Support the luminaire, or have a second person hold it, before you release the bracket. Two people on the stainless steel version at 16.0 kg.
4. Release the secondary retention last, not first.
5. Lower the luminaire in a controlled way, never on its cable. If it is to be reinstalled, pack it in its original box, resting on its front and never on its back.

WARNING, WORKING AT HEIGHT

Removal is the moment a luminaire falls. Rig the lifting arrangement before you loosen anything, and keep the area below clear for the whole operation.

13.2 Disposal



Electrical equipment does not belong in household or unsorted municipal waste. Under European Directive 2012/19/EU it must be collected separately and processed by an approved recycling facility. Observe the national and regional rules at the place of disposal.

The cast aluminium housing, the 316L housing and the 316L bracket are all recyclable materials, and a stainless steel luminaire has a real scrap value. Separate the housing from the electronics at the recycler rather than in the field.

Glossary

Cd · A	Drag coefficient times frontal area, the figure used for wind load
CRC	Corrosion resistance class, EN 1993-1-4
CRI, Ra	Colour rendering index
CX	Extreme corrosion category, ISO 9223
DALI-2	Addressable digital lighting control protocol
Hazard distance	The distance beyond which the luminaire is Risk Group 1 per IEC/TR 62778
HT	High temperature range
IR	Infrared. The IR-reflective print reflects radiant process heat
L90B05	90 per cent of initial output retained by 95 per cent of the units
MCB	Miniature circuit breaker
MTBF	Mean time between failures
NFC	Near field communication, used to set the driver without power
NTC	Negative temperature coefficient, the temperature sensor in the luminaire
PREN	Pitting resistance equivalent number, a measure of stainless steel corrosion resistance
PWM	Pulse width modulation, a dimming method
Ta	Ambient temperature
Tc	Case temperature of the driver, not the ambient
THD	Total harmonic distortion
ULOR	Upward light output ratio
WEEE	Waste electrical and electronic equipment

Specifications are subject to change. This manual describes the standard configurations. Where a project specification differs, the project documentation takes precedence.

14 Appendix

14.1 Declaration of conformity

EU Declaration of Conformity, 9 December 2025

JEL Products B.V., Ampèrestraat 19e, 3861 NC Nijkerk, The Netherlands, declares under its sole responsibility that the products it covers are in conformity with the essential requirements of the directives below. The Barracuda Series is named in its product scope as **Barracuda Series, BA-48 including HT and SS versions**, with all electrical, optical and mechanical variants within the defined type codes, wattages, voltages and colour temperatures.

DIRECTIVES	
Low Voltage	2014/35/EU
EMC	2014/30/EU
RoHS	2011/65/EU and (EU) 2015/863
WEEE	2012/19/EU

DECLARATION	
Date	9 December 2025
Place of issue	Nijkerk
Signed by	L. de Graaf, Technical Director
Serial number	See product marking
Year of manufacture	2024 to 2026

APPLIED HARMONISED STANDARDS

EN IEC 60598-1 luminaires, general requirements. EN IEC 60598-2-x particular requirements. EN IEC 61347-1 lamp controlgear, general. EN IEC 61347-2-13 LED controlgear. EN IEC 62384 LED driver performance. EN IEC 60529 IP classification. EN IEC 61000-6-2 EMC immunity, industrial. EN IEC 61000-6-4 EMC emission, industrial. EN ISO 12100 risk assessment, where applicable.

The technical file is compiled and maintained by JEL Products B.V. at the address above. The **signed declaration** is available on request and is supplied with the project documentation. Document: EU DECLARATION OF CONFORMITY_DCbright_EU_09122025.

14.2 Warranty

Family	Housing	Electrical and seals
Cast aluminium, AC and DC	5 years on the complete luminaire	
316L stainless steel	20 years	5 years
High temperature, aluminium	5 years on the complete luminaire, at ambients up to plus 120 degrees Celsius	
High temperature, 316L	20 years	5 years

Warranty runs from the date of delivery under the JEL Products warranty terms and covers material and manufacturing defects.

It does not apply where the luminaire has been installed, operated or maintained contrary to this manual, where the housing has been opened, where a driver or cable other than the one supplied has been used, where mains has been connected directly to an AC luminaire, where the polarity of a DC luminaire has been reversed, where it has been cleaned outside the limits in section 10.5, or where it has been used outside the intended use in section 2.2.

> **NOTE**
> Improper installation, operation or maintenance may also invalidate the certificate and the declaration of conformity, not only the warranty.

14.3 Related documents

Document	Where
Barracuda datasheet, cast aluminium	Product page
Barracuda SS datasheet	Product page
Barracuda HT datasheet	Product page
Photometric files per optic, EULUMDAT	Product page, per optic
Dimensioned drawings, DXF and STEP	On request
Driver box manual, DRB-1 and DRB-2	On request
Cleaning protocol B5.17, stainless and HT	On request
Crane Light Stabilizer documentation	On request
Crane boom lighting frame documentation	On request
Signed declaration of conformity	On request, and with the project documentation
Test and inspection reports	On request

14.4 What this manual replaces

This edition supersedes all earlier Barracuda operating instructions, including the edition of 19 February 2024 and the separate instructions issued for the stainless steel and high temperature versions. Where an older document and this manual disagree, this manual applies. See section 1.5 for the full revision history.

> **NOTE**
> If you hold a printed copy, check the revision on the cover against the version on the product page before you rely on a figure. A manual in a site file can be several years old.

CONTACT

JEL Products B.V.

Ampèrestraat 19e
3861 NC Nijkerk
The Netherlands

+31 (0)33 785 9809
info@jelproducts.nl
jelproducts.nl

To verify the authenticity of a test or inspection report and certificate, contact us on the number above. Quote both codes from the type label.

Product page

Photometric files, drawings, the datasheets and the current version of this manual.

jelproducts.nl/en/products/barracuda