JEL PRODUCTS
SUSTAINABLE | LIGHTING | SOLUTIONS

INSTRUCTION MANUAL

Linear Series

Industrial linear LED luminaire, one manual for three families: the Linear in AC, the Linear in DC, and the high temperature range, each in four lengths.

DOCUMENT	REVISION	DATE	LANGUAGE
MAN-LVS-EN	2	18 / 11 / 2026	EN



Read before installation | Keep for future use | Qualified personnel only | LVAC01 to LVAC04 | LVDC01 to LVDC04 | LVHT01 to LVHT08

JEL Products B.V. · Ampèrestraat 19e · 3861 NC Nijkerk · The Netherlands

jelproducts.nl

Contents

This manual covers the whole Linear Series. Most of what follows applies to every version, because the housing, the bracket, the junction box and the optics are shared. Where a section applies to one family only, the family is named in the heading or in the row.

BEFORE YOU START

1	**About this document**	Who it is for, symbols, hazard classes, revision history
2	**The product**	The three families, intended use, order codes, the type label
3	**Technical data**	Specification per length, dimensions, weight and wind load, standards
4	**Safety**	Electrical, optical, falling, hot surfaces, and what must never be done

INSTALLATION

5	**Preparation**	Transport, storage, contents of the delivery, tools, unpacking
6	**Mechanical mounting**	The two brackets on the slot, surface and suspended mounting, continuous runs, torques, aiming
7	**Electrical installation**	The junction box, AC with the driver inside, DC, the high temperature system, glands, cable length
8	**Commissioning**	Checks before switching on, first power up, final aiming
9	**Operation and dimming**	What each version accepts, bi-colour and amber, what the luminaire does by itself

THROUGH LIFE

10	**Maintenance**	Interval, inspection, records, cleaning in a washdown regime and the HT protocol
11	**Fault finding**	Symptom, probable cause, action
12	**Repair and spare parts**	What is replaceable on site and what returns to JEL Products
13	**Removal and disposal**	Taking the luminaire out of service, WEEE, glossary
14	**Appendix**	Declaration of conformity, warranty, contact and documents

WHICH VERSION DO YOU HAVE

Code on the label	Version
LVAC01 to **LVAC04**	Linear AC, 300, 600, 900 and 1,200 mm, driver inside, no optic
LVAC05 to **LVAC08**	Linear AC with optic, the same four lengths
LVDC01 to **LVDC04**	Linear DC, 9 to 32 VDC, the same four lengths
LVHT01 to **LVHT04**	Linear HT, AC, remote driver, the same four lengths
LVHT05 to **LVHT08**	Linear HT, DC, drivers on board, the same four lengths

The last digit is the length: 01 is 300 mm, 02 is 600, 03 is 900 and 04 is 1,200 mm; 05 to 08 repeat that order. The code is on the type label on the rear of the housing, section 2.5, next to a second code that is not an article number.

PRODUCT PAGE

Photometric files per optic and length, drawings, the datasheets and the current version of this manual.

jelproducts.nl/en/products/linear

KEEP THIS MANUAL

Store it with the site documentation and pass it on to every person who works on the luminaire.

1 About this document

Read this manual and understand its safety instructions before you install, operate or maintain the luminaire. Failure to do so can result in serious injury or death.

1.1 Who this document is for

This manual is written for the buyer, the installer, the maintenance technician and the end user. Assembly, installation, commissioning and maintenance may only be carried out by a qualified person: someone with electrical training who can recognise the risks described here and avoid the hazards that arise during the work.

Every person who works on the luminaire must have read these warnings and must follow them. Keep the manual for the service life of the installation.

1.2 Hazard classes

Safety information in this manual is graded. The class tells you how serious the consequence is if the instruction is ignored.

DANGER
A hazard with a high level of risk which, if not avoided, will result in death or serious injury.

WARNING
A hazard with a medium level of risk which, if not avoided, could result in death or serious injury.

CAUTION
A hazard with a low level of risk which, if not avoided, could result in minor or moderate injury.

NOTE
Information that matters for a correct result but that is not related to a hazard.

1.3 Symbols


Electrical hazard
Live parts. Isolate the supply before working on the luminaire.


General hazard
Described in the text beside the symbol.


Optical radiation
Do not look into the operating light source.


Hot surface
High temperature range. The housing reaches process temperature.


Crush hazard
Moving parts during mounting and aiming.


Two persons
This step must be carried out by two people.


Read the manual
Read and understand it before use.


Protective earth
Terminal for the protective earth conductor.


CE marking
Complies with the applicable European legislation.


Separate collection
Not unsorted municipal waste.

1.4 Feedback

The latest version is on the product page. If you find an error, write to info@jelproducts.nl. We would rather correct a sentence than have an installer guess.

1.5 Revision history and what this edition replaces

Linear luminaires have been supplied in two generations and earlier instructions exist for both. **This edition supersedes all of them**, including the DCbright operating instructions of 2 March and 6 July 2026 and the generation 1.5 instruction. Where they disagree, this manual applies.

Date	Revision	Change
Before 2026	-	Generation 1.5 operating instruction, Linear HT. Superseded
2 March 2026	-	DCbright operating instruction Linear AC, generation 2.0. Superseded
6 July 2026	-	Operating instruction Linear HT generation 2.0, and the separate driver sheet LIN90-120-HT. Superseded
7 September 2026	1	First edition of the combined manual, AC, DC and high temperature range in all four lengths, to the JEL Products manual standard. **Corrected against the 2026 instructions:** the standard AC carries its driver inside and has no driver box, the impact rating is IK09 and not IK08, the warranty is 5 years on the complete luminaire, and the service life is TM-21 L90B05 and not the LM70 figures printed there
18 November 2026	2	EMC corrected: EN 55015 and EN 61547 third-party tested, not by TÜV. IEC 60533 withdrawn.

2 The product

The Linear is a cast aluminium linear luminaire rated IP69K and IK09, at 213 lumens per watt. It is specified for the places where a tube shaped fitting with plastic end caps does not last: washdown, vibration, impact and cold. Four lengths, in AC with the driver inside, in 24 V DC, and as a high temperature range to plus 120 degrees Celsius.

2.1 The three families

Same housing profile, same bracket, same junction box and the same optic set. What differs is where the driver sits and what the supply is.



Linear AC. 90 to 305 VAC with the BLD075 or BLD120 driver inside the housing, nothing outside it. LVAC01 to LVAC04



Linear DC. 9 to 32 VDC, drivers on the board, for vehicles, vessels and machines. LVDC01 to LVDC04



High temperature. Rated to plus 120 degrees Celsius, remote driver on AC, drivers on board on DC, Titanium Grey. LVHT01 to LVHT08

	Linear AC	Linear DC	High temperature
Article base code	LVAC01 to 04 · with optic LVAC05 to 08	LVDC01 · 02 · 03 · 04	LVHT01 to 04 on AC · LVHT05 to 08 on DC
Lengths	300, 600, 900, 1,200 mm	300, 600, 900, 1,200 mm	300, 600, 900, 1,200 mm
Luminous flux	6,400 · 12,800 · 19,200 · 25,600 lm	5,600 · 11,200 · 16,700 · 22,300 lm	AC as the standard AC · DC 3,900 · 7,800 · 11,700 · 15,600 lm
Power	30 · 60 · 90 · 120 W	30 · 60 · 90 · 120 W	AC 30 to 120 W · DC 22 · 44 · 66 · 88 W
Efficacy	213 lm/W	186 to 187 lm/W	213 lm/W on AC · 177 lm/W on DC
Ambient	minus 45 to plus 50 °C	minus 45 to plus 50 °C	minus 45 to plus 120 °C on AC, plus 110 °C on DC
Driver	BLD075 or BLD120 inside the housing	On the board in the housing	Remote BLD075 or BLD120 on AC, on the board on DC
Housing	Cast aluminium, one piece, e-coated Titanium Black	Cast aluminium, one piece, e-coated Titanium Black	Cast aluminium, one piece, e-coated Titanium Grey
Front	Diffuse chemically hardened glass, or diffuse borosilicate, IK09	Diffuse chemically hardened glass, or diffuse borosilicate, IK09	Diffuse borosilicate, IK09
Optics	None, 136 degrees diffuse, or 30, 60, 90 or 120 degrees	None, 136 degrees diffuse, or 30, 60, 90 or 120 degrees	None, 120 degrees, or a 20, 40 or 60 degree HT optic
Termination	Junction box in the end cap, optional H07BQ-F cable	Junction box in the end cap, optional H07BQ-F cable	Junction box in the end cap, SiHF-OB silicone cable
Ingress	IP66, IP67, IP68, IP69K	IP66, IP67, IP68, IP69K	IP66, IP67, IP68, IP69K
Weight	3.45 · 5.05 · 6.8 · 8.4 kg with the driver inside	2.8 · 4.4 · 6.0 · 7.6 kg	2.8 · 4.4 · 6.0 · 7.6 kg, driver separate on AC
Warranty	5 years complete luminaire	5 years complete luminaire	5 years to plus 120 °C on AC, plus 110 °C on DC

All three families share their optics and their photometry per length, so one lighting calculation serves a mixed installation. The high temperature range has its own photometry for the HT optics. The number in the type name on the datasheet, LIN30 to LIN120, is the length in centimetres, not the wattage.

2.2 Intended use

The Linear is intended for permanent professional installation as general and task lighting along a line, indoors or under cover, within the ambient temperature range and the supply range of the version you have. It is mounted on its two brackets to a ceiling, a structure, a rack or a machine frame, surface mounted or suspended, singly or linked into a continuous run, and is aimed according to a lighting design. Typical applications:

Family	Where it is used
Linear AC	Food and beverage process lines with daily washdown, production lines and conveyor runs, warehouse and picking aisles, cold store aisles and freezer corridors, car park decks and undercroft parking, corridors, walkways and service tunnels, vehicle wash and inspection bays, pharmaceutical and clean process areas, machine and process line mounting, inspection and packing lines, retrofit of fluorescent and tube style battens
Linear DC	Vessel engine rooms, workshops and stores on 24 V, mobile plant and service vehicles, mobile light towers and generator sets, container and cabin interiors, agricultural machines and trailers, any position where the supply is a battery system
High temperature	Drying tunnels and curing ovens, paper machine drying sections, climate and test chambers, paint lines and powder coating booths, bakery and food process ovens, heat treatment and annealing lines, textile and coating lines, asphalt and bitumen plant, boiler houses and flue gas ducts, sterilisation and autoclave rooms, foundry and melt shop walkways, kiln service galleries

2.3 What the luminaire is not for

The following uses are outside the intended use. They are not covered by the warranty and, in several cases, they are unsafe.

- **Explosive atmospheres.** No Linear is ATEX or IECEx certified. None may be installed in a zoned hazardous area.
- **Mains on a DC version, or a battery supply on an AC version.** LVAC and LVDC are the same housing. Only the type label tells them apart.
- **Ambient above plus 50 degrees Celsius** for the standard versions, and above the rating of a high temperature version: plus 120 on AC and plus 110 on DC.
- **Permanent immersion.** IP68 is verified as a test class, not as a continuous operating condition. IP69K covers washdown, not submersion.
- **Open outdoor area lighting.** The diffuse front is made for close range along a line. Where the position is outdoors and open, the DarkLicht range is the correct answer.
- **More luminaires on one supply than the run was calculated for.** A continuous run is calculated by JEL Products on the wattage and the cable. Adding a luminaire to a run that was sized without it overloads the first feed point.
- **Direct mounting against thermal insulation.** Keep 75 mm clear around the housing for convection, and mount the brackets to a surface that carries the heat away or lets air past.
- **Consumer, decorative or domestic lighting.**
- **Emergency or escape route lighting.** No Linear has battery back up or a self test.
- **Uplight applications.** Nothing is emitted above the horizontal at nil tilt, and the luminaire is not designed to be aimed upward.
- **Operation with a damaged front, housing, junction box or bracket**, or on the high temperature AC versions with a driver other than the driver supplied for that length.

2.4 Order codes

LVAC08-50K.60

LVAC01 to 04	Linear AC, 300, 600, 900 and 1,200 mm, driver inside, without optic
LVAC05 to 08	Linear AC with optic, the same four lengths; the suffix names the optic
LVDC01 to 04	Linear DC, 9 to 32 VDC, the same four lengths
LVHT01 to 04	Linear HT, AC, remote driver, the same four lengths
LVHT05 to 08	Linear HT, DC, drivers on board, the same four lengths
65K to 22K	6500, 5000, 4000, 3000, 2700 K, amber 2200 K. HT: 6500, 4000, 2700 K only
BIC	Bi-colour 4000 K with amber 2200 K or 1700 K, switched in operation, section 9.3. Not on HT
.30 .60 .90 .120	Optic, on LVAC05 to 08 and on the DC versions. LVAC01 to 04 have no optic, 136 degrees diffuse
.20 .40 .60	HT optic, on the high temperature versions

The last digit is the length. DC versions run at a fixed constant current, so another power level is a custom build and not a setting. Cable, cable length, the linking set for a continuous run, the borosilicate front, the control protocol and the Ra 80 or Ra 90 option are confirmed at quotation and are not part of the code.

2.5 The type label, and the second code on it

The type label on the rear of the housing carries the article code, the electrical data, the protection class, the ingress rating and the serial number. It also shows a **second code that is not an article number and that will not match what you ordered**. That is correct and it is deliberate.

> **NOTE**
>
> The second code is a JEL Products internal production code, such as LIN120-120AC-OP. It records the specific printed circuit board fitted, the production batch and the production date. We use it for traceability, for warranty and for service. It carries no information you need in order to specify, order or reorder a luminaire.

When you contact us about a luminaire, quote both. The article code tells us what it is. The internal code tells us exactly which one it is, which board is in it and when it was built, and that is usually what settles a service question in one call instead of three. **Photograph the label before you fit the luminaire:** once it hangs under a ceiling the label faces the ceiling.

> **WARNING, AC AND DC LOOK IDENTICAL**
>
> LVAC and LVDC are the same housing, the same bracket and the same junction box. **Only the type label tells them apart.** Mains on a DC luminaire destroys it immediately; a 24 V supply on an AC luminaire does nothing at all. Read the label before you connect.



The end of the Linear: the junction box with its gland and blanking plug, and the slot for the brackets on top

3 Technical data

All values apply to the standard configuration without optics at 25 degrees Celsius ambient, including driver consumption. The optic versions carry a small loss. A hyphen means the entry does not apply to that version.

	LIN30 300 mm	LIN60 600 mm	LIN90 900 mm	LIN120 1,200 mm
PERFORMANCE				
Luminous flux, AC and HT-AC	6,400 lm	12,800 lm	19,200 lm	25,600 lm
Luminous flux, DC	5,600 lm	11,200 lm	16,700 lm	22,300 lm
Luminous flux, HT-DC	3,900 lm	7,800 lm	11,700 lm	15,600 lm
Power, AC, DC and HT-AC	30 W	60 W	90 W	120 W
Power, HT-DC	22 W	44 W	66 W	88 W
Efficacy	213 lm/W on AC and HT-AC, 186 to 187 lm/W on DC, 177 lm/W on HT-DC			
Colour temperature	6500, 5000, 4000, 3000, 2700 K, amber 2200 K, and bi-colour. HT: 6500, 4000 or 2700 K, no bi-colour			
Colour rendering	Ra above 70 standard, Ra 80 or Ra 90 on request. MacAdam step 3 or better			
Optics	Without optics 136 degrees diffuse, or 30, 60, 90 or 120 degrees. HT: 120 degrees, or a 20, 40 or 60 degree HT optic			
Upward light output ratio	0 per cent at nil tilt			
ELECTRICAL, AC AND HT-AC				
Supply voltage range	90 to 305 VAC, 50 or 60 Hz			
Current draw at 220 to 277 V	0.13 to 0.11 A	0.26 to 0.22 A	0.41 to 0.32 A	0.52 to 0.44 A
Driver	BLD075, 131 × 68 × 33.5 mm, 650 g		BLD120, 161 × 68 × 33.5 mm, 800 g	
Driver position	Inside the housing on LVAC01 to 04. Outside the hot zone, bare or in a DRB-1, on LVHT01 to 04			
Inrush current	66 A peak, T50 170 µs at 220 V		66.8 A peak, T50 350 µs at 220 V	
Luminaires per MCB, B16 · C16 · C25 · D16	11 · 19 · 30 · 32		5 · 8 · 13 · 17	
Surge protection	6 kV line to line, 10 kV line to earth, IEC 61000-4-5			
Power factor and THD	Above 0.9 and below 15 per cent at 60 to 100 per cent load			
Dimming	0 to 10 V, PWM, DALI-2, or set over NFC			
ELECTRICAL, DC AND HT-DC				
Supply voltage range	9 to 32 VDC, 12 and 24 V nominal. Drivers on the board, reverse polarity and surge protected			
Current draw, DC, at 24 V	1.25 A	2.5 A	3.75 A	5.0 A
Current draw, HT-DC, at 24 V	0.92 A	1.83 A	2.8 A	3.7 A
Dimming	On request			

3 Technical data, continued

	Linear AC	Linear DC	High temperature
CONSTRUCTION			
Housing	Cast aluminium, less than 0.08 per cent copper, one piece. The end caps are cast too, and one of them is the junction box		
Surface finish	Conversion layer plus two layer titanium-based e-coating, Titanium Black		The same e-coating, Titanium Grey
Bracket	Two brackets on the slot along the top of the housing, adjustable from minus 90 to plus 90 degrees, M8 pivot with an indexed disc		
Front	Diffuse chemically hardened glass, or diffuse borosilicate on request		Diffuse borosilicate glass
Protection class	Class I on LVAC01 to LVAC04, the driver is inside and the housing is earthed on the PE terminal. Class II on the DC and HT versions; on the HT-AC the driver box is earthed instead		
Ingress protection	IP66, IP67, IP68 and IP69K, each class tested separately, so IP69K does not imply IP68		
Impact resistance	IK09, IEC 62262, set by the glass front		
Corrosion class	C5 industrial and marine, ISO 9223. There is no 316L version of the Linear		
TERMINATION, DIMENSIONS AND WARRANTY			
Termination	Junction box in the end cap with terminals, one M20 gland and one M20 blanking plug for linking through. Cable H07BQ-F on request, length per order		Junction box in the end cap. SiHF-OB heat resistant silicone cable, four cores on AC, two on DC, length per order, to roughly 150 m
Cross section	Housing 134 mm wide over the bracket, 102 mm high, 125 mm high over the bracket base plate, from the production drawing		
Length	300, 600, 900 or 1,200 mm housing, plus 30 mm for the two end caps: 330, 630, 930 and 1,230 mm overall		
Weight	3.45, 5.05, 6.8 and 8.4 kg with the driver inside	2.8, 4.4, 6.0 and 7.6 kg	2.8, 4.4, 6.0 and 7.6 kg, plus 650 or 800 g driver outside the hot zone on AC
Storage temperature	minus 45 to plus 50 degrees Celsius, dry, in the original packaging		
LED service life, TM-21 L90B05	above 360,000 h at 50 °C		See the ladder in section 3.3
Warranty	5 years on the complete luminaire		5 years to plus 120 °C on AC, to plus 110 °C on DC

THE DRIVER IS INSIDE, ON THE STANDARD AC VERSION

On a process line or in a cold store there is nowhere to put a driver box and nowhere to reach it. The Linear AC therefore carries its driver inside the housing and is still IP69K: mains goes straight into the junction box in the end cap. That is also why the AC version weighs 650 or 800 g more than the DC and the HT luminaire of the same length. On the high temperature AC version the driver leaves the housing and the hot zone, see section 3.3.

NOTE, THE DATASHEET WEIGHTS

The Linear datasheet of August 2026 gives 2.8 to 7.6 kg for every version. That is the housing without an internal driver, correct for the DC and the HT luminaire. The AC version with its driver inside weighs 3.45, 5.05, 6.8 and 8.4 kg, as the 2026 operating instruction states. The datasheet is being corrected; use the figures in this manual for a structural check.

THREE THINGS THIS RANGE DOES NOT DO

316L housing	Not available on the Linear. For a stainless luminaire in a washdown area see the Snapper SS or the Piranha SS
Bi-colour at high temperature	The HT versions are single colour, 6500, 4000 or 2700 K
A driver box on the standard AC	There is none. The driver is inside. A driver box exists only on the HT-AC versions

3.1 Dimensions, weight and wind load

All drawings are dimensioned in millimetres and are taken from the production drawing of the 600 mm version. DXF and STEP models are available on request. The four lengths share the cross section, the end caps and the bracket; only the housing length changes.

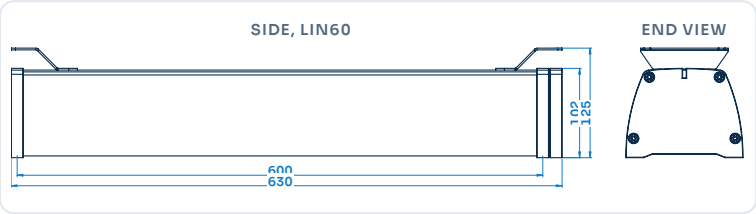

Linear LIN60, side and end view. Housing 600 mm, 630 mm over the end caps, 102 mm high, 125 mm over the bracket base plate, 134 mm wide over the bracket

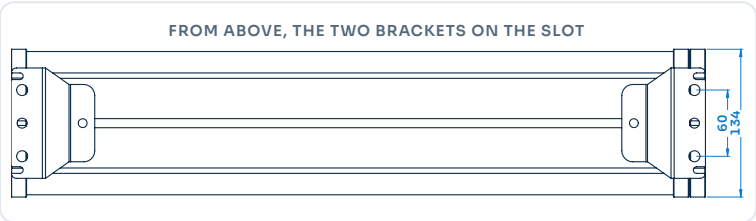

From above. The two brackets sit in the slot along the top and can be placed anywhere along the length; the drawing shows them at the ends

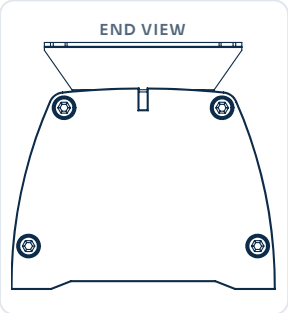

The cross section, enlarged: 134 mm over the bracket, 102 mm housing, 125 mm over the base plate



LIN120 from the side. Four lengths, one cross section

DIMENSIONS, FROM THE DRAWING

Cross section	134 × 102 mm, w × h, housing
Over the bracket	125 mm high, bracket base plate 80 mm wide
Length overall	330, 630, 930 or 1,230 mm

MOUNTING INTERFACE, PER BRACKET

Base plate	80 × 39 mm, 2 × Ø 8.5 mm plus two slots
To the luminaire	Two sliding nuts in the slot, M8, 20 Nm
Adjustment	minus 90 to plus 90 degrees, indexed, section 6.1

WEIGHT

LIN30 · 60 · 90 · 120	2.8 · 4.4 · 6.0 · 7.6 kg, plus 0.65 or 0.8 kg with the driver inside

WIND LOAD, CALCULATED FROM THE DRAWING

Across the wind	0.039 · 0.072 · 0.105 · 0.138 m²
Along the wind	0.014 m², every length
Force at 45 m/s, LIN120	Approximately 210 N across the wind at Cd 1.2 and an air density of 1.25 kg/m³

NOTE, THE DATASHEET ENVELOPE

The datasheet gives 130 × 110 × 350 to 1,250 mm. The production drawing dimensions the housing at 134 mm wide over the bracket and 125 mm high over the base plate, with 30 mm of end caps on the length. This manual follows the drawing; use its figures when you check the space above a conveyor or in an enclosure.

3.2 The bracket

Every Linear is delivered with two brackets. Each one is an L-shaped plate with a base that bolts to the structure and an arm that carries the luminaire on an M8 pivot. The tilt is set on the pivot and locked with a small index screw into a disc with seven holes, so the angle cannot creep under vibration. The brackets ride in the slot along the top of the housing on two sliding nuts and can be placed anywhere along the length.

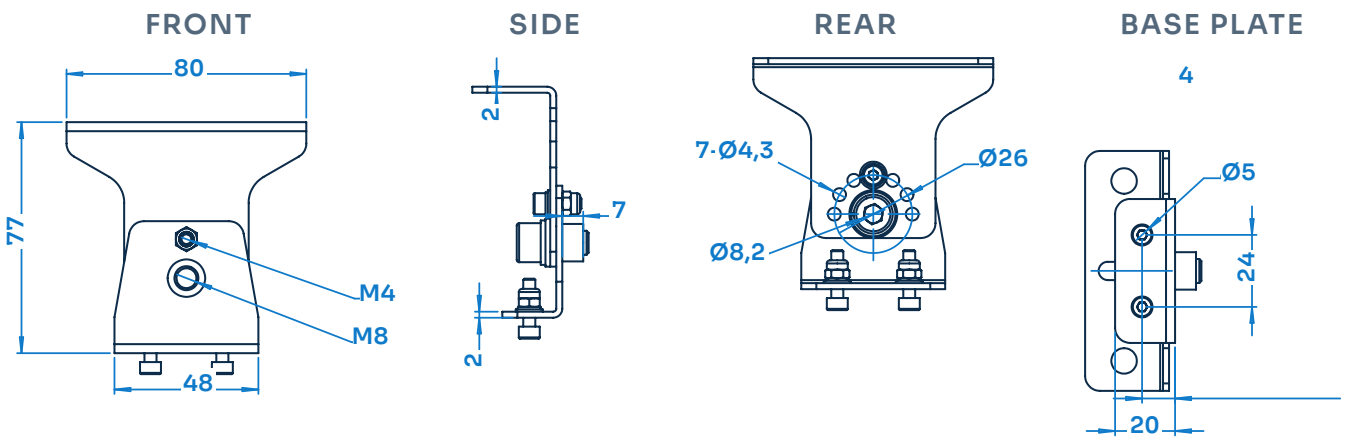

The bracket from drawing Linear_bracket_20240511: front, side, rear with the seven-hole index disc, and the base plate from above

BASE PLATE, TO THE STRUCTURE	
Size	80 × 39 mm, 2 mm plate
Fixing holes	2 × Ø 8.5 mm at the ends, plus two slotted holes of 6 mm for adjustment
Bolt	M8, or M6 through the slots, suited to the surface
ARM, TO THE LUMINAIRE	
Pivot	M8 through the arm, Ø 8.2 mm hole
Index	M4 screw into a Ø 26 mm disc with 7 × Ø 4.3 mm holes
To the slot	Foot plate 28 × 60 mm with two M8 through the sliding nuts
Height	77 mm from base plate to foot

NOTE, THE ADJUSTMENT RANGE

The datasheet states the bracket as adjustable from minus 90 to plus 90 degrees. The generation 2.0 operating instruction states 0 to 45 degrees, and the index disc carries seven holes. The pivot itself turns freely when slack; **the seven index positions are the positions that are locked**. Set the tilt on an index position wherever the position vibrates. Where a design angle falls between two holes, use the pivot torque alone and check the aim at the first maintenance visit.

WARNING, TWO BRACKETS, ALWAYS

A Linear is never hung on one bracket. Even the LIN30 uses two, one near each end. On one bracket the housing acts as a lever on a single M8 pivot, and vibration works it loose.



The bracket on the housing, seen from the end

3.3 Dimensions and lifetime, high temperature range

Standard industrial LED luminaires stop at roughly plus 50 degrees Celsius, because the driver does: what fails in the heat is the electrolytic capacitor in the driver. On the **LVHT01 to LVHT04** the driver therefore leaves the housing and the hot zone entirely and is joined to the luminaire with heat resistant silicone cable. On the **LVHT05 to LVHT08** the drivers stay on the board, which is simpler to install and is why their limit is plus 110 rather than plus 120 degrees Celsius. The Linear HT is one of only three luminaires in the range that can carry an optic at high temperature.

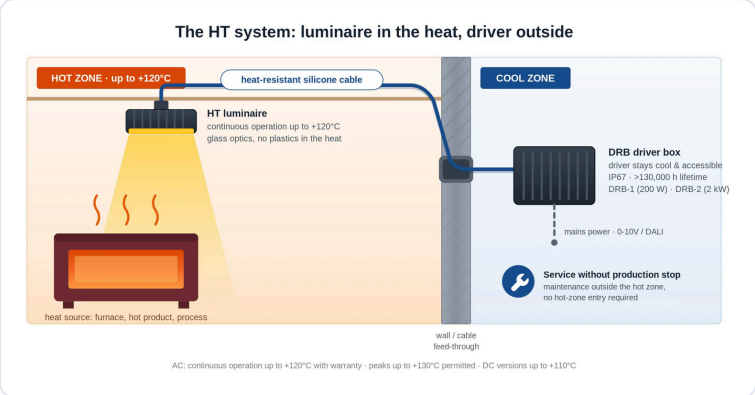

The high temperature system on the AC version: only the luminaire is in the heat. The driver sits in the cool zone, in a DRB-1 or on a tray, and it is reachable without entering the hot zone

	LVHT01 to 04, AC	LVHT05 to 08, DC
Ambient	minus 45 to plus 120 °C	minus 45 to plus 110 °C
Supply	90 to 305 VAC, 50/60 Hz	9 to 32 VDC, 0.92 to 3.7 A at 24 V
Driver	Remote BLD075 (LIN30, LIN60) or BLD120 (LIN90, LIN120), outside the hot zone, fits the DRB-1	On the board in the housing
Cable	SiHF-OB silicone, 4 cores. 2 × 1.0 plus 2 × 0.5 mm² on LIN30 and LIN60, 2 × 2.5 plus 2 × 0.5 mm² on LIN90 and LIN120	SiHF-OB silicone, 2 cores, 2 × 1.0 mm²
Dimming	0 to 10 V, PWM, DALI-2 or NFC	On request
Flux	6,400 to 25,600 lm, as the standard AC	3,900 to 15,600 lm
Optics	120 degrees as standard, or a 20, 40 or 60 degree HT optic	
Dimensions and weight	As the standard Linear without internal driver, section 3.1. Plus 650 or 800 g driver on AC	

LUMEN MAINTENANCE AT ELEVATED AMBIENT

The headline figure is measured at 50 degrees Celsius. In a hot zone the ambient governs, so use the row that matches the position. This ladder applies to every JEL high temperature luminaire.

Ambient	TM-21 L90B05
plus 50 degrees Celsius	360,000 h
plus 85 degrees Celsius	103,000 h
plus 105 degrees Celsius	71,700 h
plus 120 degrees Celsius	51,400 h

WARNING, THE DRIVER AMBIENT IS PLUS 50 DEGREES CELSIUS

On the AC version the luminaire is rated to plus 120 degrees Celsius. **The driver is not.** It must sit in an ambient of at most plus 50 degrees Celsius, outside the hot zone. Mounting it just outside a tunnel, on a wall that is at plus 80 degrees Celsius, is the single most common installation error on a high temperature job.

BUILT-IN SELF-PROTECTION

An HT luminaire protects itself. As its internal temperature rises it dims back automatically, and on overheating it switches itself off and comes back when it has cooled.

That feedback is why the HT-AC cable has four cores and not two: two carry the power and two of 0.5 mm² carry the temperature signal between the luminaire and the driver. Conductors 7, 8, 11 and 12 in section 7.2 are that pair.

DANGER

Never install an LVHT01 to 04 with the temperature pair disconnected, shorted or left out of an extended cable run. Without it the luminaire has no thermal protection and will run itself past its rating in a hot zone.

3.4 Standards and verification

Subject	Standard	By
Luminaire safety	IEC/EN 60598-1, -2-1	In house
EMC emission and immunity	EN 55015, EN 61547	Third party
Ingress	IEC 60529, ISO 20653	In house
Impact	IEC 62262, IK09 with the glass front	In house

Subject	Standard	By
Vibration	IEC 60068-2-6	In house
Shock	IEC 60068-2-27	In house
Corrosion	ISO 9223, class C5	In house
Photometry	IES LM-79, TM-21 for lifetime	In house
Substances	RoHS, REACH	Self-declaration

This table lists how the product is verified. The harmonised standards named on the declaration of conformity are listed separately in section 14.1. Photobiological safety is covered in section 4.3. ISO 20653 is the road vehicle ingress standard, where the IP69K high pressure and steam test comes from; on the Linear that test is what a daily washdown asks of the luminaire. To check the authenticity of a test or inspection report and certificate, contact JEL Products on +31 (0)33 785 9809 or at info@jelproducts.nl.

OPTICS AND BEAM ANGLES

The Linear is supplied without optics as standard, which is where the 213 lumens per watt comes from: the diffuse front is the only thing in front of the LED. The optic versions trade a little output for control and are chosen from the lighting calculation. The beam angle is the full angle at 50 per cent of the peak intensity, the field angle at 10 per cent.

Optic	Distribution	Beam angle	Field angle	Typical use
None	Very wide, diffuse	136°	168°	Aisles, corridors, lines at low height
30°	Narrow, symmetric	36°	58°	High bay and deep racking
60°	Wide, symmetric	71°	97°	Aisles and conveyor runs
90°	Very wide, symmetric	-	-	Low mounting over a wide area
120°	Very wide, symmetric	-	-	Machine and enclosure interiors
HT 20, 40, 60°	HT optic	20, 40 or 60°	-	Along a tunnel or a duct

Nothing is emitted above the horizontal at nil tilt; section 6.7 shows what tilt does to that figure. The 90 and 120 degree optics and the HT optics are specified from the lighting calculation; their measured angles are on the product page as they are published.

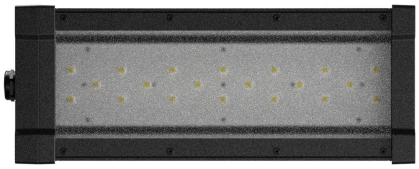

LIN30 with the 30 degree optic. Four lengths share one housing profile, one bracket and one optic set

WHAT EACH RATING MEANS HERE

IP69K	Close range high pressure and steam cleaning. Tested separately from IP68, so **IP69K does not imply IP68**
IK09	The glass front. Glass is chosen for chemical resistance and radiant heat, not for impact; there is no polycarbonate front on the Linear
Class I and II	The place where the driver sits is earthed. LVAC01 to 04 carry the driver inside and are Class I: the housing is earthed on the PE terminal in the junction box. The DC and HT versions are Class II; on the HT-AC the driver box and the tray **are** earthed

4 Safety

This chapter lists the hazards that arise when a Linear is installed, operated and maintained, and what to do about each of them. It does not replace the national and local electrical and working at height regulations that apply on your site.

4.1 Electrical hazard

DANGER, LIVE PARTS

Working in the junction box of an AC luminaire, on the driver or in the driver box while the supply is on can cause death or serious injury. Isolate the supply, secure it, and verify that the circuit is dead before you open the junction box. Check twice.

DANGER, MAINS IS IN THE LUMINAIRE ON THE AC VERSION

On LVAC01 to 04 the mains cable terminates **inside the luminaire**, in the junction box in the end cap. Every other JEL floodlight keeps mains in a driver box. Treat the Linear AC as a mains appliance: nobody opens the end cap with the circuit live. See section 7.1.

- Where the driver sits is earthed. LVAC01 to 04 have the driver inside and are Class I: the protective earth lands on the PE terminal and earths the housing. DC and HT versions are Class II; on the HT-AC the driver box, the tray and any metal enclosure must be earthed.
- Make the connection to the standards and directives that apply in your country, within the supply range in chapter 3 and of the right type: AC, or 9 to 32 VDC. **Read the label before you connect.**
- Only use the driver and the cable supplied for an HT-AC luminaire. Another driver can create a dangerous situation and voids the warranty. Keep one metre to a radio receiver.

4.2 Falling objects

WARNING, FALLING LUMINAIRE

A luminaire that comes loose from a ceiling or a structure can injure whoever is under it. Verify the structure before mounting, use both brackets, and fit a secondary retention wherever the luminaire is above a walkway or a working area, and always on anything that moves.

The luminaire weighs 2.8 to 8.4 kg on its two brackets. Under EN 60598-1 the suspension has to withstand four times the mass. A 1,200 mm luminaire at 8.4 kg over a picking aisle hangs on four M8 bolts into a ceiling that is often a profiled sheet or a suspended grid: **the anchor is the weak point, not the bracket**. Have the structure checked, then fit the retention anyway.

4.3 Optical radiation

WARNING, OPTICAL RADIATION

Never look into the operating light source. Direct exposure at close range can cause permanent eye damage.

Photobiological safety is classified to **EN 62471**, with the blue light hazard assessed to **IEC/TR 62778**. That gives a **hazard distance**: beyond it the luminaire is Risk Group 1 and no exposure limit is reached in normal viewing. **It follows the optic and the length**, because it is set by the peak intensity and not by the light output. The figures below come from our own LM-63 photometric files.

Version	LIN30	LIN60	LIN90	LIN120
AC, 30 degree optic	2.1 m	3.0 m	3.7 m	**4.3 m**
AC, 60 degree optic	1.2 m	1.7 m	2.0 m	2.3 m
AC and HT-AC, no optic	0.7 m	1.0 m	1.2 m	1.4 m
DC, no optic	0.7 m	0.9 m	1.1 m	1.3 m
HT-DC, no optic	0.6 m	0.8 m	1.0 m	1.1 m

The rule on site. Take **5 m** where a 30 degree optic is fitted and **3 m** for anything else. Nobody works or stands within that distance looking towards the front. The diffuse Linear without optics is the mildest luminaire in the JEL range, which is exactly why it is the one people look up into on a packing line. Aim or focus with the luminaire switched off.

Method: the square root of the peak intensity divided by the threshold illuminance at the Risk Group 1 boundary, taken as 3,500 lx for the 6500 K LED. The LIN120 with the 30 degree optic peaks at about 64,600 cd, which is where the 4.3 m comes from. The HT optics of 20 and 40 degrees are not yet in the photometric library; take the 30 degree figure for them until they are. Calculated from our own photometric files, not a measurement report.

4.4 Hot surfaces, high temperature range



WARNING, HOT SURFACE

A Linear HT in a hot zone reaches the temperature of its surroundings, up to plus 120 degrees Celsius. Touching it causes immediate and severe burns. It stays hot long after the supply is switched off.

- Isolate the supply and let the luminaire cool to hand temperature before any work. Do not judge the temperature by looking at it. Nobody touches it without the zone being cooled and released.
- Wear heat resistant gloves and the personal protective equipment required for that zone.
- Never run cold water onto hot glass. The thermal shock can break the front. See section 10.5.
- Do not apply water at all to a luminaire warmer than plus 60 degrees Celsius.
- The silicone cable is rated for the hot zone but it also gets hot. Treat the cable as a hot surface up to the point where it leaves the zone.
- The driver case of an HT-AC version may reach plus 90 degrees Celsius in service, in an ambient of at most plus 50. Let it cool before you open the box.
- A standard Linear also runs warm, and the AC version has its driver inside: the housing is the driver's heat sink. Let it cool before handling.

4.5 Crush and handling

CAUTION, MOVING PARTS

The housing pivots freely on the two brackets once the pivots are slack, and a 1,200 mm housing is a long lever. Keep fingers clear of the pivots and of the gap between the housing and the bracket arms. Two people on the LIN90 and the LIN120: one holds the housing level while the other sets the tilt.

- Wear gloves, safety boots and a hard hat during assembly and installation.
- Do not work alone at height. Use rated and secured ladders, lifts or scaffolding, and never use the luminaire or its brackets as a handhold or a step.

4.6 Heat and surroundings

- Keep at least 75 mm clear around the housing, and 150 mm around a driver box. Do not cover or wrap the luminaire and do not mount it against insulation material. The brackets hold the housing 25 mm off the mounting surface, and that gap is part of the cooling.
- Keep the fins on the rear of the housing clear. Trapped dirt reduces cooling and shortens the life of the LEDs and, on the AC version, of the driver inside. The Linear has no fan and no vents.
- Do not install a standard Linear near a heat source that takes it beyond plus 50 degrees Celsius ambient: above an oven door, in a drying tunnel, over a fryer. For process heat, use the high temperature range.
- Do not expose the luminaire to corrosive chemicals outside its corrosion class without checking with your supplier first. There is no 316L Linear; for permanent salt exposure and process chemistry beyond C5 see the Snapper SS.

4.7 Laying the luminaire down

CAUTION

Rest the luminaire on its **back**, the finned side, on the packaging or on a clean soft surface. **Never rest it on its front**, and never stand it on the junction box end.

On the Linear the glass front is the whole underside of the luminaire and it is the part that seals the housing. Put a 1,200 mm housing down on grit with the glass underneath and the glass takes the load on two points. It may not break, but a scratch in a diffuse front shows in the light, and a chipped edge is a leak path that does not show until the first washdown. The finned back is a flat plate and carries the weight without complaint. The junction box end carries the gland: a luminaire stood on its end loads the gland in exactly the direction it is not designed for.

NOTE

Keep the blanking plug in the second entry of the junction box until a cable goes through it. An open M20 entry is the one place where the IP69K rating leaves the luminaire.

4.8 What must never be done

DANGER, DO NOT OPEN THE HOUSING

Do not remove the glass, and do not open the housing beyond the junction box in the end cap. The seal, the ingress protection and the electrical safety all depend on a housing that has not been opened. The junction box is the only part of the luminaire that is designed to be opened, and only with the circuit dead. Opening anything else voids the warranty and the declaration of conformity.

- Do not modify, repair or open the luminaire. Repairs are carried out by JEL Products or by a company it appoints.
- Do not install or switch on a luminaire with a cracked front, a damaged housing, junction box or bracket, and do not use it in the applications listed in section 2.3.
- Do not connect mains to a DC luminaire, do not reverse the polarity on a DC luminaire, and do not put a luminaire on a supply outside the range on its label.
- Do not link more luminaires into a run than the run was calculated for, and do not feed a run from a cable smaller than the calculation states.
- Do not disconnect, short or omit the temperature pair on an HT-AC version. See section 3.3.
- Do not hang the luminaire on one bracket, and do not put the driver of a high temperature installation inside the hot zone.

4.9 Emergency and exceptional situations

- If an electrical fault occurs in a luminaire, a driver or a driver box, switch off the supply immediately.
- If a luminaire is severely damaged during operation, switch off the supply immediately and do not switch it on again until the luminaire has been replaced or released by JEL Products.
- No Linear has battery back up. None of them provides emergency or escape route lighting.

4.10 Potential health consequences

If ignored	Consequence
Working in a live junction box, driver or box	Severe injury or death by electric shock
Mains connected to a DC luminaire	Destroyed luminaire, arc, fire and shock risk
Looking into the operating light source	Permanent eye damage, at close range with a 30 degree optic
Touching a hot HT housing or its cable	Immediate severe burns
One bracket, or no secondary retention above a walkway	Injury from a falling luminaire of up to 8.4 kg
Luminaire used as a handhold or step	Fall from height, bent bracket
Fingers at the pivot	Crushing, minor to moderate injury
Cold water on hot glass	Broken front, glass fragments, loss of ingress protection
Luminaire rested on its glass or stood on its end	Chipped glass, damaged gland, water ingress, later failure
Temperature pair disconnected on an HT-AC	No thermal protection, LED and driver run past their rating

NEVER, ON ANY LINEAR


Never open the housing beyond the junction box


Never rest the luminaire on its glass or stand it on its end


Never carry or suspend it by the cable


Never aim a pressure washer at the gland


Never cover or wrap the luminaire


Never fit a driver other than the one supplied

5 Preparation

Everything that has to be right before the first bracket goes up.

5.1 Transport and storage

- Transport and store the luminaire in its original packaging, in a dry place, at **minus 45 to plus 50 degrees Celsius**. That applies to every family, including the high temperature range: the rating of plus 120 degrees Celsius is an operating rating, not a storage rating.
- Do not stack pallets beyond the marking on the packaging.
- Store the box flat, glass up. A 1,200 mm luminaire stored on its end stands on the junction box.
- Carry the LIN90 and the LIN120 with two people, one at each end. A long housing carried at one end twists the bracket it is still attached to.
- On a high temperature version the silicone cable is coiled in the box. Keep it coiled until the run is measured out. Silicone insulation is softer than PVC and picks up damage from being dragged.

5.2 Contents of the delivery

1 ×	Linear luminaire in the ordered configuration, junction box in the end cap with one M20 gland and one M20 blanking plug. Cable only where it was ordered, with free wire ends
2 ×	Bracket, with two sliding nuts and two M8 bolts each, fitted or loose in the box
1 ×	Remote driver on LVHT01 to 04: BLD075 on the LIN30 and LIN60, BLD120 on the LIN90 and LIN120. Bare, or in a DRB-1 driver box if ordered
1 ×	This instruction manual

> **NOTE, THE CABLE IS AN ORDERED ITEM**
>
> A standard Linear is delivered **without a cable** unless one was ordered: the site cable enters the junction box through the gland and lands on the terminals. Check the packing list. On a continuous run the linking set between the luminaires is specified at quotation and is not part of the standard delivery.

Mounting bolts for the structure are not supplied, because they depend on the structure. **The safety cable is not supplied as standard**, see section 6.5.

5.3 Unpacking

1. Read the label on the box and check that the article code matches what you ordered and what the lighting design specifies. Lengths, optics and colour temperatures differ between luminaires on the same run, and an AC and a DC luminaire look identical.
2. Cut the tape along the seams. Do not push the knife deeper than the tape.
3. Lift the luminaire out by the housing, two people on the long lengths, never by a bracket and never by the cable.
4. Check that the article code on the type label matches the code on the box, note the internal production code as well, see section 2.5, and **read the supply type on the label**.
5. Inspect the glass, the housing, the two brackets and the junction box for cracks, impact damage or a missing blanking plug.
6. Keep the packaging until the luminaire is installed and working. A luminaire that has to be returned travels in its own box.

> **WARNING, DAMAGED PRODUCT**
>
> If you find any damage, do not install the luminaire and do not switch it on. Contact JEL Products.

5.4 Tools

The list names the bolt and not a spanner size, because the bolt into the structure is your choice: bring a socket or ring spanner that fits the M8 or M6 you have chosen for the base plates.

Tool	Used for
Socket or ring spanner for the base plate bolts	Two per bracket, M8 through the round holes or M6 through the slots
Socket or ring spanner, 13 mm	The M8 pivot and the two M8 on the sliding nuts
Hex key, 3 mm	The M4 index screw in the disc
Hex key for the end cap bolts	The four bolts of the junction box cover
Torque wrench, 2 to 30 Nm	Foot bolts 20 Nm, pivot 15 Nm, index screw 3 Nm, cover bolts 3 Nm, gland 2.5 Nm, section 6.6
Two open ended spanners for the cable gland	One holds the body, one turns the cap nut
Wire stripper and cutter, end sleeve crimping tool	Preparing the cable ends for the junction box terminals
Small screwdriver for the terminals	Inside the junction box
Voltage tester	Verifying that the circuit is dead before the cover comes off
Multimeter	Checking the supply voltage, on DC under load
Insulation resistance tester	Commissioning an AC installation, chapter 8
Heat gun	Heat shrink tubing over the gland on an HT version, section 7.6
Inclinometer, or a phone with one	Setting and recording the tilt
Heat resistant gloves	Any work in a hot zone on the HT range

Do not use a percussion drill on or near the brackets once they are on the housing.

NOT SUPPLIED WITH THE LUMINAIRE

Site cable	Sized from section 7.7, terminated in the junction box. Or ordered with the luminaire, section 5.2
Mounting bolts	Two per bracket, A4 or 316 stainless steel or hot dip galvanised class 8.8, with anchors suited to the surface
Safety cable	Ordered separately, see section 6.5
Second gland	Where a run links through the second entry, an M20 gland replaces the blanking plug, section 7.6
Heat shrink tubing and self amalgamating tape	For sealing the gland on an HT version, section 7.6
IP67 junction box for a bare HT driver	Where the driver is not in a DRB-1, section 7.5
Threadlocker	Where the installation calls for it, and on a vibrating machine it usually does

> **NOTE**
>
> The reason the tool list names a bolt and not a spanner size is that the bolt into the structure is your choice, not ours. The base plate offers two round holes and two slots, and what goes through them follows from the surface: a concrete ceiling, a steel purlin, a rack upright or a machine frame each ask for a different anchor.

TWO PEOPLE OR ONE

One person can fit a LIN30 or a LIN60. The LIN90 and the LIN120 are two people, every time: one holds a 1,230 mm housing level under the ceiling while the other starts the first bolt, and nobody does that alone from a ladder.

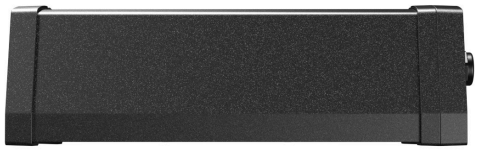

The Linear as delivered: housing, two brackets, junction box in the end cap

6 Mechanical mounting

Every Linear hangs on two brackets that ride in the slot along the top of the housing. Mount the base plates to the structure first, then hang the housing, then set the tilt, then make the electrical connection. The procedure is identical for all three families and all four lengths; only the weight and the number of hands differ.

DANGER

Isolate the supply and secure it against being switched on again before you start. Installation may only be carried out by a qualified person, and on the LIN90 and the LIN120 by two of them.

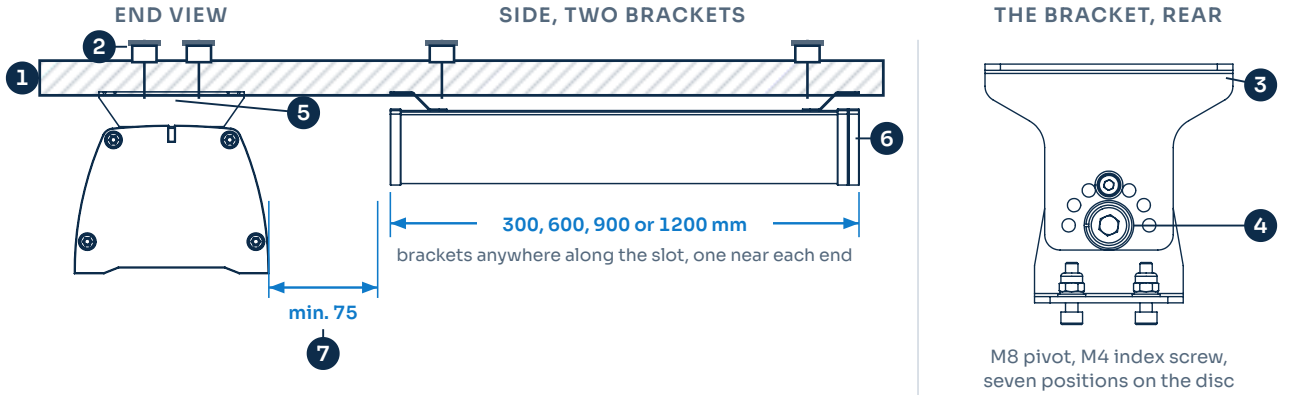

Mounting principle. The end view and the bracket are the production drawings to scale; the side view is reduced. One bracket near each end, anywhere along the slot, two bolts through each base plate, and the housing 25 mm off the surface for air

1. Load bearing structure: ceiling, purlin, rack upright or machine frame. Verify it for four times the weight in chapter 3; on a suspended ceiling or a profiled sheet verify the anchor, not the plate
2. Two bolts per base plate, M8 through the Ø 8.5 mm holes or M6 through the slots, washer under each head, torque per section 6.6
3. Bracket base plate, 80 × 39 mm. The slots give a few millimetres of alignment between the two brackets before the final torque
4. M8 pivot with the seven-hole index disc and the M4 index screw, one per bracket. Both index screws in the same hole, section 6.1
5. Two sliding nuts per bracket in the slot along the top, M8 at 20 Nm. The brackets slide to where the structure offers a fixing
6. Junction box in the end cap, with the gland and the blanking plug. Leave room to take the cover off with the luminaire hanging
7. Minimum **75 mm** free space around the housing. No fan, no vents: the finned back and the air gap under the base plates are the only cooling path

BEFORE YOU GO UP

- The lighting design is on site, with position, tilt, optic and length per luminaire, and the run calculation where luminaires are linked.
- The surface is flat enough for two base plates on one line: a housing forced between two brackets that are not in line is under permanent bending load.
- The structure carries four times the weight. On a retrofit of a tube style batten the old fixings are checked for the new load: a Linear is heavier than the batten it replaces.
- Mounting hardware is A4 or 316 stainless steel in a washdown area, or hot dip galvanised class 8.8. The cable route and the feed point are decided.
- HT range: the driver position outside the hot zone is chosen and reachable, section 7.5. The supply circuit can be isolated and secured.

6.1 Standard brackets

1. **Check the position.** Follow the lighting design. Check that the mounting surface is flat, clean and free of obstructions, and that the structure carries the load.
2. **Slide the brackets to their positions** in the slot along the top of the housing, one near each end, so that each base plate lands on a sound fixing point. Tighten the two M8 on the sliding nuts to **20 Nm**. On a run, place the brackets at the same distance from the end on every luminaire, so the run hangs straight.
3. **Mark and drill the holes,** two per bracket, from the base plates: Ø 8.5 to 9 mm for M8 through the round holes, or use the slots with M6. Do not use a percussion drill with the housing already hanging next to it.
4. **On an HT-AC version, mount the driver first,** outside the hot zone, in an ambient of at most plus 50 degrees Celsius, section 7.5.
5. **Offer the luminaire up,** two people on the LIN90 and LIN120, and check that both base plates sit flat on the surface.
6. **Fit the bolts,** a washer under each head, A4 or 316 stainless steel or hot dip galvanised class 8.8, and **tighten to the torque** in section 6.6 with a torque wrench. Use the slots to bring the two brackets into line before the final torque.
7. **Set the tilt.** Slacken the M4 index screw and the M8 pivot on both brackets, turn the housing to the design angle with an inclinometer rather than by eye, seat both index screws in the same hole of the disc, and tighten the pivots to **15 Nm** and the index screws to **3 Nm**. Both brackets in the same hole, or the housing is twisted.
8. **Check the tilt.** Do not tilt more than fifteen degrees above the design angle. Beyond that the upward light output ratio is no longer nil, see section 6.7. Record the angle.
9. **Fit the secondary retention** if section 6.5 applies.

NOTE, WHY THE INDEX SCREW MATTERS

The M8 pivot clamps the arm by friction, and on a conveyor or a machine frame friction is not enough over years. The M4 screw in the disc is what holds the angle. Always seat it, and always in the same hole on both brackets. A Linear that has slowly rolled on its pivots is the most common aiming complaint on this product.

WARNING, DO NOT USE THE LUMINAIRE AS A HANDHOLD

A 1,200 mm housing under a ceiling looks like a grab rail. It is not. Neither the housing nor the brackets are a handhold or a step.

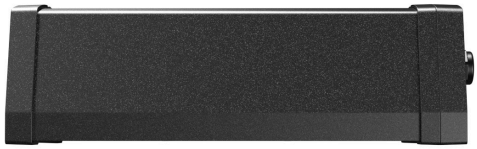

The Linear on its two brackets, seen from the rear. The fins on the back are the cooling path

FIXING PER BRACKET

	All versions
Base plate	80 × 39 mm, 2 × Ø 8.5 plus two slots
Bolts to the structure	2 × M8, or M6 in the slots
Bolts to the luminaire	2 × M8 on sliding nuts, 20 Nm
Pivot	M8, 15 Nm, plus M4 index screw, 3 Nm
Adjustment	minus 90 to plus 90 degrees, seven index positions
Weight to carry	2.8 to 8.4 kg over two brackets

AFTER MOUNTING, BEFORE WIRING

- [ ] Four structure bolts tightened to torque and marked.
- [ ] Both brackets in line, sliding nut bolts at 20 Nm.
- [ ] Tilt set and recorded, both index screws in the same hole, pivots at 15 Nm.
- [ ] Secondary retention fitted where required.
- [ ] Room left at the junction box end to take the cover off and to route the cable with a drip loop.
- [ ] Nothing within 75 mm of the housing, fins clear.
- [ ] HT only: the driver sits outside the hot zone.

6.2 The mounting configurations

Which one you have follows from the position, not from the order: the same two brackets do all three. What changes is what the base plates are bolted to and how the cable arrives.



Surface. Base plates directly to a ceiling, a soffit, a rack or a machine frame. The housing hangs 25 mm below the surface



Suspended. Base plates to a cross bar on wire or rod, the tilt on the brackets. The wire carries the luminaire, never the cable



Continuous run. Luminaires end to end, fed at one point and linked through the second entry of each junction box, section 6.3

6.3 Continuous runs

The Linear links into a continuous line: the site cable enters the first junction box through the gland, lands on the terminals, and a link cable leaves through the second entry to the next luminaire. That is what the blanking plug is for.

Per supply	Depends on the wattage and the cable. **Calculated by JEL Products on the actual run, at quotation.** It decides the cable size and the number of feed points
Link cable	Specified with the run. H07BQ-F on the standard versions, SiHF-OB on the HT range, through an M20 gland in the second entry
Gap between luminaires	Enough to take a junction box cover off with the luminaires hanging, and for the link cable's bend radius
AC runs	Every luminaire has its own driver inside, so a run is a parallel group of mains loads. The MCB count in section 7.3 applies per luminaire
DC runs	The current adds up along the run. Section 7.7 gives the cross section for one luminaire; a run is sized on the sum

> **WARNING**
>
> Do not add a luminaire to a run that was calculated without it, and do not link the HT versions through a cable that is not silicone. On a DC run the first link cable carries the current of every luminaire behind it.

6.4 Mounting attitude and position

Attitude	Glass down, brackets up, at nil tilt. That is the attitude the photometry and the ULOR of nil assume
Wall mounting	Possible on the same brackets, tilted down along the wall. The wind area then follows section 3.1 across the wind
Clearance	At least 75 mm around the housing. The air gap under the base plates stays open; do not pack it
Driver box clearance	At least 150 mm around a DRB-1 on an HT-AC installation
Maximum mounting height	50 m. No limit on the elevation of the site itself
Junction box	At the end where the cable arrives. Leave room to take the cover off, and put the drip loop below the gland
Wash down zones	The luminaire is IP69K and may sit in the wash down zone. **A driver box may not**: put it outside
Hot zones	Only the high temperature versions go in a hot zone. On the HT-AC version only the luminaire does
Cold stores	The standard versions run to minus 45 degrees Celsius. Bring the luminaire in dry and keep the junction box closed until the cable goes in, so no frost forms on the terminals

6.5 Secondary retention

WARNING

Fit a secondary retention wherever the luminaire is mounted above a walkway, a working area or a production line, and always on anything that moves: a mobile light tower, a vehicle or a vessel. On a suspended ceiling or a profiled sheet roof it is not optional either, because the anchor is the weak point.

NOTE, THE SAFETY CABLE IS AN ORDERED ITEM

The safety cable is **not supplied as standard**. It is supplied with the luminaire when it is ordered, and it is rated for the weight of the luminaire it is supplied for. State the length and the version when you order it: a LIN120 AC at 8.4 kg needs a different cable from a LIN30 at 2.8.

Length	1 m
Rating	Matched to the weight of the luminaire it is supplied for
Anchor	To the structure, independent of the bracket fixings, not to the bracket and not to the cable
Supply	Ordered separately, never as standard

1. Choose an anchor point independent of the four bracket bolts that carries four times the mass of the luminaire. At 1 m the cable is short, so the anchor has to be close. Pick it before you drill.
2. Loop the cable around that anchor and attach the other end to a bracket, through the slot in the base plate or around the arm, not to the housing and not to the site cable.
3. Leave a little slack, enough to adjust the tilt later but not so much that the luminaire can gather speed if the fixings fail.
4. Record the safety cable in the site documentation, so that it is inspected at every maintenance visit.

DANGER

Do not substitute a cable, chain or strap of your own without having it rated. A longer cable turns a drop into a swing, and a 1,200 mm housing swinging under a ceiling hits whatever is next to it before it hits the floor.

6.6 Tightening torques

Use a torque wrench. Overtightening a stainless bolt in a stainless thread causes galling and the joint cannot be undone. Undertightening lets it work loose under vibration, and the Linear is fitted to conveyors and machine frames that shake.

Connection	Size	Torque
Bolts on the luminaire, sliding nuts	M8	20 Nm
Bracket pivot	M8	15 Nm
Index screw in the disc	M4	3 Nm
Junction box cover	4 bolts	3 Nm
Cable gland cap nut	M20	2.5 Nm, and dimension L in section 7.6
Bolts on the bracket, class 8.8	M8	20 Nm
Bolts on the bracket, class 8.8	M6	8 Nm

The JEL range table runs to M24 at 590 Nm; on the Linear nothing larger than M8 occurs. Torques apply to clean, dry, undamaged threads. For a stainless bolt in a stainless thread, use an anti-seize compound and reduce the torque accordingly. Where the mounting hardware or the anchor comes from another supplier, that supplier's torque takes precedence.

6.7 Aiming and obtrusive light

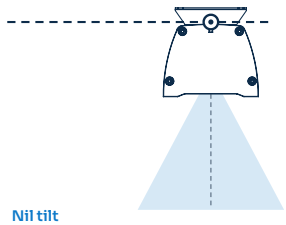

Nil tilt
The luminaire hangs level and aims straight down. The whole beam stays below the horizontal, so the ULOR is nil. That is the figure we publish.

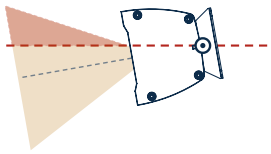

Tilted up
Aiming towards the horizontal throws light further, but part of the beam now crosses it. The ULOR is no longer nil and the obtrusive light check fails.

The brackets tilt the housing about the pivots. What tilting costs you

Nil tilt means the luminaire hangs level and aims straight down. In that position the upward light output ratio is nil. Indoors that is the position the photometry assumes; under a canopy or on an external walkway it is the figure a permitting authority asks for, and the starting point for an assessment against NEN-EN 12464-2 and the NSVV guidance on obtrusive light.

Every degree away from straight down eats into that figure, and beyond a certain angle the beam crosses the horizontal. A diffuse Linear without optics is 136 degrees wide, so it crosses the horizontal at a smaller tilt than any optic. Aim from the lighting design; where none is available keep the tilt at or below fifteen degrees and have the result verified.

7 Electrical installation

DANGER, LIVE PARTS

Isolate the supply, secure it against being switched on again, and verify that the circuit is dead before the junction box cover comes off. Only a qualified person may make the electrical connection.

7.1 Architecture, the standard AC versions

On LVAC01 to LVAC04 the driver sits **inside the housing**. There is no driver box, no external driver and no low voltage link: the mains cable enters the junction box in the end cap through the M20 gland and lands on three terminals. The second M20 entry carries the blanking plug, or the link cable to the next luminaire on a run.

Terminal	Colour	Function
L	Brown	Phase, 90 to 305 VAC
N	Blue	Neutral, or the second phase on a two phase supply
PE	Green and yellow	Protective earth, to the PE terminal in the box. It earths the housing, the luminaire is Class I with the driver inside, and it carries the earth through to the next luminaire on a run
DIM	Grey pair, where fitted	0 to 10 V, PWM or DALI-2 control, section 9.2. Not on a luminaire ordered without dimming

1. Take the four bolts out of the end cap cover and lift the cover off. Keep the gasket with it and keep it clean.
2. Strip the cable to suit the gland and the terminals, fit end sleeves, and feed it through the gland. On a run, feed the link cable through the second entry, where an M20 gland replaces the blanking plug.
3. Land the conductors, one per terminal. Where a link cable leaves, the incoming and the outgoing conductor of the same colour share the terminal block, not one terminal.
4. Tighten the glands to **2.5 Nm** and to dimension L in section 7.6, and pull on the cable to confirm. Refit the cover with the gasket aligned, four bolts at **3 Nm**.
5. Support the cable with a drip loop below the gland, clamped so that no weight reaches it.



The junction box in the end cap: one M20 gland, one M20 blanking plug, four cover bolts

WARNING, THE DRIVER IS MATCHED TO THE LENGTH

The BLD075 inside a LIN30 or LIN60 and the BLD120 inside a LIN90 or LIN120 are programmed to that length. They are not a field part. A driver fault on an AC Linear is a luminaire exchange, see chapter 12.

NOTE, ONE LUMINAIRE PER DRIVER, ALWAYS

The driver inside feeds its own LED board and nothing else. Linking through the second entry passes the **mains** to the next luminaire; it never passes driver output. Every luminaire on an AC run is its own mains load.

The DCbright instruction of 2 March 2026 lists a remote driver box in the package contents of the standard AC version. That is the HT-AC configuration; the standard AC has no box.

7.2 Architecture and conductors, the high temperature AC versions

On LVHT01 to LVHT04 the driver sits outside the luminaire and outside the hot zone. Mains arrives at connector 1 in the driver box, the driver feeds connector 2, and cable 2 carries the driver output and the temperature signal to the junction box of the luminaire over heat resistant silicone cable.

ONE DIAGRAM FOR EVERY AC VERSION IN THE RANGE

The diagram below is the same diagram as in the other JEL floodlight manuals: the conductor count, the colours, the connectors and the terminal numbering are shared across the range. On the Linear HT the driver is the **BLD075** on the LIN30 and LIN60 and the **BLD120** on the LIN90 and LIN120, and the cable is SiHF-OB silicone with two cores for power and two of 0.5 mm² for the temperature signal.

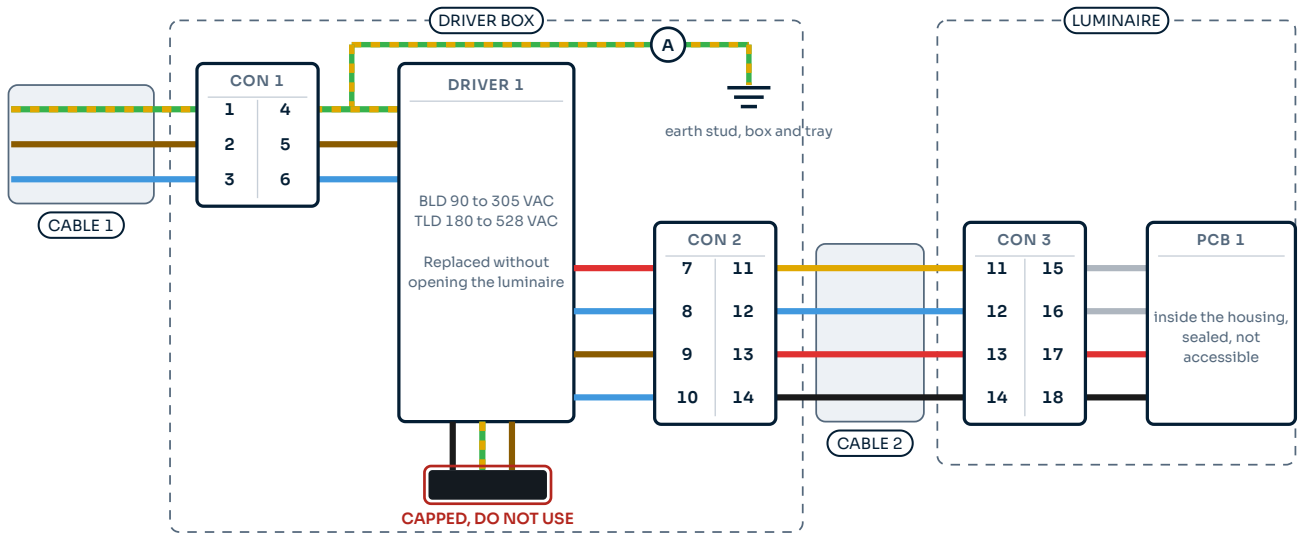

CABLE 1, mains	1 green and yellow earth · 2 brown phase · 3 blue phase or neutral. Mains voltage
DRIVER to CON 2	7 red TEMP + · 8 blue TEMP – · 9 brown DRI OUT + · 10 blue DRI OUT –
CABLE 2	11 yellow TEMP + · 12 blue TEMP – · 13 red DRI OUT + · 14 black DRI OUT –. No mains, no earth
CON 3 to PCB 1	15 grey · 16 grey · 17 red DRI OUT + · 18 black DRI OUT –
A	The incoming earth conductor lands on the earth stud of the driver box, and earths the box and the tray. The luminaire is Class II and is not earthed
CAPPED	**The black, green and brown conductors on the driver are capped off and are not connected. Do not use them**

Every conductor, colour and terminal number as on the production drawing LVHT GEN2. Cable 1 carries mains, cable 2 the driver output and the temperature feedback

DANGER, THE CAPPED CONDUCTORS ARE NOT SPARE WIRES

The driver leaves the factory with **three capped conductors: black, green and brown**, part of the driver control lead and **not connected on purpose**. Leave the cap in place and do not use them as an earth, a neutral or a spare core. Adding dimming later is a driver change, done by JEL Products or by a qualified person with the driver documentation.

The incoming **earth conductor lands on the earth stud of the driver box**, marked **A**, and earths the box and the tray. Cable 2 carries no protective earth and the luminaire itself is not earthed: the driver sits outside the housing, so the luminaire is Class II.

This diagram applies to generation 2.0 models from 2025 onward. For a generation 1.5 luminaire, check the connection against the diagram supplied with it.

CONDUCTORS, LVHT01 TO LVHT04

No	Colour	From, to	Function
1	Green and yellow	Incoming cable to CON 1	Earth
2	Brown	Incoming cable to CON 1	Phase
3	Blue	Incoming cable to CON 1	Phase or neutral
4	Green and yellow	CON 1 to driver 1	Earth
5	Brown	CON 1 to driver 1	Phase
6	Blue	CON 1 to driver 1	Phase or neutral
7	Red	Driver 1 to CON 2	Temperature, plus, NTC plus
8	Blue	Driver 1 to CON 2	Temperature, minus, NTC minus
9	Brown	Driver 1 to CON 2	Driver output, plus
10	Blue	Driver 1 to CON 2	Driver output, minus
11	Yellow	CON 2 to CON 3	Temperature, plus
12	Blue	CON 2 to CON 3	Temperature, minus
13	Red	CON 2 to CON 3	Driver output, plus
14	Black	CON 2 to CON 3	Driver output, minus
15	Grey	CON 3 to PCB	Dimming signal, plus
16	Grey	CON 3 to PCB	Dimming signal, minus
17	Red	CON 3 to PCB	Driver output, plus
18	Black	CON 3 to PCB	Driver output, minus

WARNING, CONDUCTORS 7 AND 8 ARE THE TEMPERATURE PAIR

Conductors 7 and 8, red and blue, carry the temperature signal from the luminaire to the driver. **Grey is the dimming pair, conductors 15 and 16, and nothing else.** An installation that treats 7 and 8 as a dimming input leaves the thermal protection disconnected.

On the Linear HT connector 3 is the terminal block in the junction box of the luminaire. On the generation 2.0 drawing the last four rows are labelled against PCB 1 and PCB 2; there is one board assembly per luminaire and conductors 15 to 18 run from CON 3 to that board.

7.3 Circuit breakers

Maximum number of luminaires on one miniature circuit breaker, the manufacturer figure per driver on an ABB S200 at 220 V. It applies to the standard AC versions with the driver inside and to the HT-AC versions with the driver outside alike, because the driver is the same.

Driver	B16	C16	C25	D16
BLD075, LIN30 and LIN60	11	19	30	32
BLD120, LIN90 and LIN120	5	8	13	17

It is the **inrush** that limits the count on these drivers, not the running current: the BLD075 peaks at 66 A with a T50 of 170 microseconds and the BLD120 at 66.8 A with 350 microseconds, while the luminaire draws at most 0.52 A at 220 V. On a continuous run every luminaire counts, because every luminaire has its own driver. A guide for the engineering phase, not a substitute for the installation calculation.

NOTE

Where a residual current device is fitted, the combined leakage current of the circuit decides the count. One Linear draws at most 0.7 mA.

7.4 Architecture, all DC versions

The DC versions have their drivers on board. There is no external driver and no driver box. A two core cable goes from the DC distribution to the junction box in the end cap, and that is the installation. LVDC01 to 04 and LVHT05 to 08 are wired the same; on the HT-DC the cable is silicone.

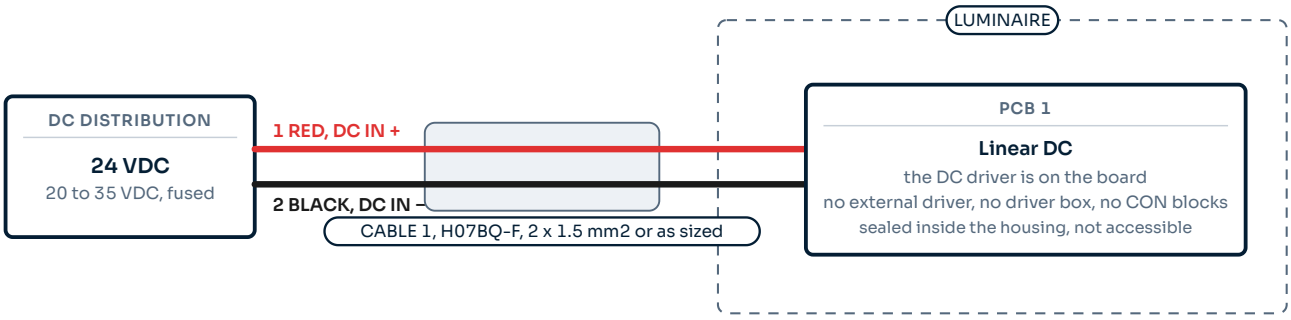

CABLE 1 1 red DC IN + · 2 black DC IN –. Two cores, no earth conductor and no control conductors
POLARITY **Reversing plus and minus does not light the luminaire and can damage the board. Check the marking at both cable ends**
CLASS II No protective earth conductor runs to the luminaire. Earth the DC distribution and any metal enclosure per the installation

Never connect a DC luminaire to an AC supply, and never connect an AC luminaire to mains without its driver.

Two conductors and a fuse. Red is plus, black is minus, on every DC luminaire in the JEL range

Terminal	Colour	Function
+	Red	DC in, plus. 9 to 32 VDC
-	Black	DC in, minus

Supply	9 to 32 VDC, 12 and 24 V nominal
Current at 24 V	1.25 · 2.5 · 3.75 · 5.0 A on LVDC01 to 04. 0.92 · 1.83 · 2.8 · 3.7 A on LVHT05 to 08
Current at 12 V	Double the 24 V figure
Protection	Reverse polarity and surge protected on the board
Fuse	Sized to the cable, per luminaire or per run
Dimming	On request, built to order

DANGER, POLARITY AND SUPPLY TYPE

Never connect a DC luminaire to an AC supply. Never reverse the polarity of a DC luminaire. Never exceed 32 V. Any of these destroys the luminaire and is covered by no warranty.

WARNING, THE CURRENT IS WHAT LIMITS THE RUN

At 5.0 A a LIN120 on 24 V draws forty times the current of the same luminaire on mains. On a DC run the first cable carries the sum of every luminaire behind it. Size the cross section on section 7.7 and on the sum, not on one luminaire.

ON BOARD DRIVER

A driver fault on a DC luminaire is not a ground level repair, because there is no ground level driver. The luminaire is exchanged. That is the trade the DC version makes for needing no driver box and no mains at the position.

The DC version is the usual choice on vessels and mobile plant. On a fixed installation with mains available, the AC version with its driver inside is the better choice.

7.5 The high temperature system

Standard industrial LED luminaires stop at roughly plus 50 degrees Celsius, because the driver does. In virtually every failure of LED lighting in heat, the driver gives up first. The HT range is therefore a system in two parts: the luminaire in the hot zone and the driver outside it. On the Linear that split is what separates the HT-AC from the standard AC, which carries its driver inside. The system diagram is in section 3.3.

What this means on site

1. **Choose the driver position first, not last.** Outside the hot zone, within minus 40 to plus 50 degrees Celsius ambient, and reachable. Everything else follows from that choice.
2. **Measure the run against what you were sent.** The silicone cable is specified per order; confirm the length on the packing list. The cable goes to roughly 150 m, but the cross section has to follow, section 7.7.
3. **Use only the silicone cable supplied,** and keep it off hot surfaces. SiHF-OB is rated for the ambient in the hot zone, not for contact with an oven wall, and an H07BQ-F cable is not rated for either. Route it clear and support it.
4. **Connect all four cores.** Two carry the power, two of 0.5 mm² carry the temperature signal. Without the thin pair the luminaire has no thermal protection, see section 3.3.
5. **A bare driver goes in an IP67 junction box.** The BLD075 and BLD120 have flying leads. Where the driver is not in a DRB-1, both the mains connection and the luminaire connection are made inside an IP67 box, so that water cannot track along the cable into the driver.
6. **Earth the driver box and the tray.** The HT luminaire itself is Class II and is not earthed.

> **DANGER**
>
> Never install the driver in the hot zone, in a duct that passes through it, or above a heat source where convection carries the heat up to it. A driver failure in a hot zone is a fire risk as well as a light failure.

THE LINEAR HT SYSTEM

Luminaire ambient	minus 45 to plus 120 °C on AC, plus 110 °C on DC
Driver ambient	minus 40 to plus 50 °C, outside the hot zone
Cable	SiHF-OB silicone, 4 cores on AC, 2 on DC. Length per order, to roughly 150 m
Driver	BLD075 on LIN30 and LIN60, BLD120 on LIN90 and LIN120, 90 to 305 VAC
Driver box	**DRB-1**, one driver up to 320 W, 276 × 194 × 86.5 mm, 4.2 kg, IP66 and IP67. Or bare in an IP67 box
Front	Diffuse borosilicate glass
Optics	120 degrees, or a 20, 40 or 60 degree HT optic
Self-protection	Dims back on rising internal temperature, switches off on overheating

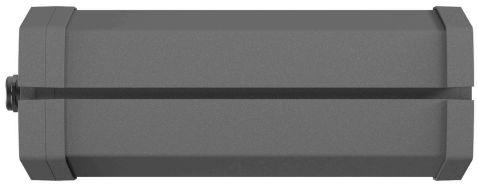

Linear HT, Titanium Grey, with the silicone cable leaving the junction box

Above plus 130 degrees Celsius, or where the thermal load is not known, JEL Products calculates the load per position and designs the system, including the driver location and the cable route.

7.6 Cable glands

The junction box has two M20 × 1.5 entries with an O-ring seal: one carries the gland, the other the blanking plug, or a second gland where a run links through. Tighten the cap nut to 2.5 Nm and to the dimension in the table, measured over the gland. That is a more reliable instruction under a ceiling than a torque figure alone. On the HT range then apply heat shrink tubing and self amalgamating tape over the gland. Dimension L runs from the face of the end cap to the end of the cap nut, with the cable fitted; it is not the thread length.

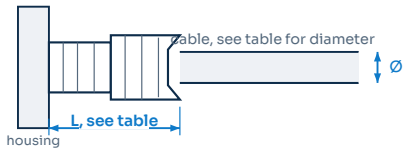

Where dimension L is measured

Cable	M12×1.5 -D-SI 4 to 8	M20×1.5 -2H 4 to 8	M20×1.5 -H 5 to 10	M20×1.5 6 to 12	M20×1.5 -D 8 to 14
H07BQ-F 4G0.5 mm², Ø 6.7 mm	17.7 mm	19.8 mm	n/a	n/a	n/a
H07BQ-F 2G2 mm², Ø 7.3 mm	18.4 mm	19.9 mm	n/a	n/a	n/a
H07BQ-F 2G1.5 + 2G0.5 mm², Ø 8 mm	18.9 mm	20.0 mm	**20.4 mm**	n/a	n/a
H07BQ-F 4G1.5 + 2G0.5 mm², Ø 10.4 mm	n/a	n/a	21.3 mm	22.2 mm	n/a
H07BQ-F 2G2.5 + 2G0.5 mm², Ø 9.5 mm	n/a	n/a	21.1 mm	n/a	n/a
H07BQ-F 4G2.5 + 2G0.5 mm², Ø 12.3 mm	n/a	n/a	n/a	n/a	21.0 mm
SiHF-08 2×1 mm², Ø 7.9 mm	18.9 mm	**20.0 mm**	n/a	n/a	n/a
SiHF-08 2×2.5 + 2×0.5 mm², Ø 10.7 mm	n/a	n/a	**21.3 mm**	n/a	n/a
EPDM H07RN-F 3G1.5 mm², Ø 10 mm	n/a	n/a	21.3 mm	n/a	n/a

This table is identical across the JEL floodlight range, so a site with Linears, Snappers and Barracudas on it works to one set of figures. The rows in bold are the ones that apply to the Linear: the three core mains cable of the standard AC, the two core silicone of the HT-DC and the LIN30 and LIN60 HT-AC, and the four core silicone of the LIN90 and LIN120 HT-AC. **The four core silicone cable with 1.0 mm² power cores, 2 × 1.0 plus 2 × 0.5 mm², is also covered by dimension L** under the SiHF-08 entries. Here n/a means the combination is outside the clamping range of that gland and must not be used. Where a cable and a gland do not appear together in this table, ask JEL Products before you fit them.

7.7 Cable length and voltage drop

On a Linear the cable is usually supplied by the installer, so the cross section is a decision and not a given. The rule is that the voltage drop between the source and the luminaire must not exceed **2 V**. On the AC versions that is a normal mains calculation at 0.13 to 0.52 A and the cable is never the limit; on DC it is.

DC VERSIONS AT 24 V, ONE LUMINAIRE

Cross section	LIN30 1.25 A	LIN60 2.5 A	LIN90 3.75 A	LIN120 5.0 A
1.5 mm²	69 m	34 m	23 m	17 m
2.5 mm²	114 m	57 m	38 m	29 m
4 mm²	183 m	91 m	61 m	46 m
6 mm²	274 m	137 m	91 m	69 m
10 mm²	457 m	229 m	152 m	114 m

DC VERSIONS AT 12 V, ONE LUMINAIRE

Cross section	LIN30 2.5 A	LIN60 5.0 A	LIN90 7.5 A	LIN120 10 A
2.5 mm²	29 m	14 m	10 m	7 m
4 mm²	46 m	23 m	15 m	11 m
6 mm²	69 m	34 m	23 m	17 m
10 mm²	114 m	57 m	38 m	29 m

NOTE, THE 12 V TABLE USES A 1 V LIMIT

At 24 V a drop of 2 V is 8 per cent. At 12 V the same 2 V would be 17 per cent, so the 12 V lengths are calculated at **1 V**. On a 12 V system with a long run, the answer is a thicker cable or a 24 V feed. **On a run, divide the length by the number of luminaires behind the cable**, as a first estimate; JEL Products calculates the actual run.

HIGH TEMPERATURE VERSIONS

HT-AC, driver output	50 VDC at 0.6 to 2.4 A. The supplied silicone stays inside 2 V to about **95 m on the LIN30, 48 m on the LIN60** with 1.0 mm², and **79 m on the LIN90, 60 m on the LIN120** with 2.5 mm². Beyond that, a larger cross section
HT-DC at 24 V	0.92 to 3.7 A on 2 × 1.0 mm²: about **62, 31, 20 and 15 m** for the four lengths. A LIN120 HT-DC on a long run needs a thicker cable than the one supplied as standard

All lengths are the maximum at the stated drop, copper, two conductors, one way, rho 0.0175. Where the installation calls for a tighter limit, size the cross section on that.

7.8 Making the connection

DANGER, READ THE LABEL FIRST

On LVAC01 to 04 **mains goes into the luminaire**, into the junction box in the end cap. On LVHT01 to 04 mains goes to the driver and only the driver output reaches the luminaire. On every DC version the luminaire is a 9 to 32 V device and mains destroys it instantly. The four look the same from below.

1. Confirm the circuit is dead and secured.
2. **Standard AC and all DC versions:** open the junction box, feed the cable through the gland, land the conductors per section 7.1 or 7.4 with end sleeves, one conductor per terminal, and close the cover at 3 Nm with the gasket aligned.
3. **HT-AC:** mount the driver or the driver box outside the hot zone and outside the wash down zone, in an ambient between minus 40 and plus 50 degrees Celsius, reachable without entering the hot zone. Earth the box, the tray and any metal enclosure.
4. **HT-AC:** strip and terminate the conductors per section 7.2. Use end sleeves. One conductor per terminal. Keep the dimming conductors separated from the mains conductors.
5. **On a run:** fit the second M20 gland in place of the blanking plug, feed the link cable through, and land it on the same terminal block. Keep the blanking plug for the last luminaire.
6. Tighten the glands to 2.5 Nm and to dimension L in section 7.6. On the HT range then seal with heat shrink tubing and self amalgamating tape.
7. Support and clamp the cable with a drip loop below the gland, so that no load reaches the gland. Where the position moves, clamp within 300 mm of it.
8. Check that no conductor is pinched under the cover and that the gasket sits in its groove all the way round.

DRIVER BOX FOR THE HT-AC VERSIONS

DRB-1	One driver up to 320 W, so it takes the BLD075 or the BLD120 with room to spare. 276 × 194 × 86.5 mm, 4.2 kg, IP66 and IP67
Bare driver	Supplied bare as standard, for an existing enclosure or a tray, with both connections inside an IP67 junction box
Ambient	plus 50 degrees Celsius maximum, wherever it goes

Position the driver by the **ambient**, not by its case temperature.

8 Commissioning

Do not switch on until every item below has been checked. Most warranty cases that turn out not to be a product fault trace back to a step skipped here.

8.1 Checks before switching on

- [ ] Conditions within the range for that version, chapter 3, and no broken mechanical part: glass, housing, brackets, junction box.
- [ ] Supply type and voltage checked against the label: AC on an AC luminaire, 9 to 32 VDC measured **under load** on a DC luminaire.
- [ ] DC only: polarity checked, red to plus, black to minus.
- [ ] Junction box: one conductor per terminal, end sleeves fitted, gasket in its groove, cover bolts at 3 Nm, glands at 2.5 Nm and dimension L, blanking plug in the unused entry.
- [ ] Both brackets: sliding nut bolts at 20 Nm, pivots at 15 Nm, index screws seated in the same hole, structure bolts torqued and marked.
- [ ] Secondary retention fitted where section 6.5 requires it.
- [ ] Cable supported with a drip loop and clamped, with no weight on the gland.
- [ ] **HT-AC only:** the driver sits outside the hot zone within plus 50 °C ambient, all four cores are connected, and the box is earthed and closed.
- [ ] **Runs only:** the number of luminaires and the feed cable match the run calculation.
- [ ] No insulation or structure within 75 mm, fins clear, and nobody working within the hazard distance of section 4.3.

8.2 First power up

1. Restore the supply.
2. Confirm that it illuminates, and on a run that every luminaire illuminates. **Do not look into the beam**, see section 4.3.
3. Check that the light lands where the design says, from beside the luminaire.
4. Correct the tilt if required: switch off, slacken both pivots and index screws, adjust, seat both index screws in the same hole, torque, switch on and check again.
5. Record the installation: both label codes, the serial number, the position, the length, the optic, the colour temperature, the tilt, the date and the installer.

8.3 Handover

Leave this manual with the site documentation, together with the record from step 5 of section 8.2 and the run calculation where luminaires are linked.

> **WARNING**
>
> Never adjust, open or work on the luminaire while it is energised. On the AC version mains is inside the junction box. Isolate first, every time.

> **NOTE, MEASURE THE VOLTAGE AT THE LUMINAIRE**
>
> On a vessel or a machine the battery may read 24.6 V while the last luminaire on a DC run sees 21 V under load, because of the run and the other consumers on the same feed. **Measure at the far end of the run with everything running**, not at the battery with the engine off.

> **NOTE, MARK THE LENGTHS AND OPTICS ON THE DRAWING**
>
> Mark the position, the length and the optic of each luminaire. A 30 degree and a 60 degree optic in the same housing look identical from below, and on a run a LIN90 in a LIN120 position leaves a dark gap that shows up at the first audit.

> **NOTE, A BI-COLOUR LUMINAIRE ON FIRST POWER UP**
>
> A bi-colour build comes up in its default colour, which is normally the white one. Section 9.3 explains how it is switched, and it is worth demonstrating that at handover.



The Linear fitted and aimed. The first hours on a conveyor frame are what show whether the pivots and the index screws were tightened properly

9 Operation and dimming

9.1 Normal operation

A Linear needs no operator action in normal service. It switches with the circuit and reaches full output immediately, with no warm up and no restrike delay, and it may be switched as often as the application requires. In a cold store it starts at minus 45 degrees Celsius at full output. There is no lamp to change and nothing to adjust from year to year.

9.2 What each version accepts

Version	What it accepts
LVAC01 to 04	**0 to 10 V, PWM or DALI-2**, through the driver inside, on a luminaire ordered with dimming: two grey conductors in the junction box carry the signal. Or a fixed level set over **NFC** on the driver before the luminaire is closed at the factory
LVHT01 to 04, HT-AC	**0 to 10 V, PWM or DALI-2**, through the remote BLD075 or BLD120. Two grey conductors, 15 and 16, carry the signal. Or NFC on the driver
LVDC01 to 04 and LVHT05 to 08	**On request.** The drivers are on the board, so dimming is a build option and not a site fitted accessory. A standard DC Linear is a switched luminaire
Bi-colour, BIC	4000 K with amber 2200 K or 1700 K, switched with the supply. See section 9.3. Not available on the high temperature versions

9.3 Bi-colour and amber

A bi-colour Linear carries two colours in one housing and switches between them **on the supply itself**, using how long the luminaire has been off. There is no second control line and no separate switch on the luminaire.

What you do	What happens
Switch on after more than 5 seconds off	The luminaire comes up in its **default colour**, normally the white one, whatever colour it was showing before
Switch off and back on within 5 seconds	The luminaire changes to the **second colour**, the amber one
Repeat the short cycle	It toggles back and forth between the two colours, as often as you like
Several luminaires out of step	Switch the whole group off, **wait 30 seconds**, and switch on. All of them reset to the default colour and are back in step

Because the switching is on the supply, a bi-colour run fed from a relay that chatters can change colour on its own. Where the colour has to be dependable, feed it from a clean switched circuit. Amber 2200 K on its own is available on every optic, for light sensitive surroundings such as a canopy near a nature area.

> **NOTE, DIMMING AND THE FLUX FIGURES**
>
> Every luminous flux figure in chapter 3 is the figure at full output. A dimmed luminaire delivers proportionally less light and slightly better efficacy. If the design relies on a dimmed level, the lighting calculation states that level.

9.4 What the luminaire does by itself

- **Thermal foldback.** The luminaire measures its internal temperature and reduces the current as it rises. On overheating it switches off and comes back when it has cooled. This is active on every version, and on the HT-AC version it runs through the temperature pair in the cable.
- **Reverse polarity protection.** On DC, a reversed supply does not damage the luminaire and does not light it.
- **Surge protection.** On every version, and on the AC versions 6 kV line to line and 10 kV line to earth.
- **Undervoltage.** The AC driver shuts down below its input range and restarts by itself when the supply returns.

9.5 What the luminaire does not do

- It does not carry an emergency function. See section 4.9.
- It does not accept a control protocol that is not in its build. Sending DALI to a 0 to 10 V luminaire has no effect, and a luminaire ordered without dimming has no control conductors at all.
- It does not share a driver. Every luminaire on a run, AC or DC, has its own driver, and a driver programmed for one length does not run another.

10 Maintenance

DANGER

Isolate the supply and secure it before any maintenance work. On the AC version mains is inside the junction box. Let the luminaire cool to hand temperature before touching it. On the high temperature range that takes time, and the housing gives no visual warning that it is still hot.

10.1 Interval

Environment	Interval
Warehouse, car park, corridor	Once a year
Dust, exhaust or process residue	Twice a year or more
Machine frames, conveyors, vehicles and vessels	Twice a year, and check the pivots and the retention every time
Cold stores	Once a year, at a planned defrost, never with frost on the junction box
Food production and washdown	Weekly, daily on heavy soiling, and after every run on a high fat load. Protocol in section 10.5
Hot process zones, HT range	Every planned shutdown, never while hot

Too little cleaning shortens the life of the product, most of all on the AC version with the driver inside and on the HT range.

10.2 Inspection

- [ ] Housing, glass and seals: damage, cracks, corrosion, a chipped glass edge.
- [ ] Structure bolts and sliding nut bolts tight. Retighten to the torque in section 6.6.
- [ ] Pivots tight, both index screws still seated in the same hole of the disc.
- [ ] Brackets and structure sound and free of corrosion; on a suspended ceiling, the anchors.
- [ ] Secondary retention present, intact and correctly attached.
- [ ] Cable and wiring: damage, corrosion, intact insulation, no exposed conductor, drip loop still below the gland.
- [ ] Gland tight, blanking plug in place, junction box cover bolts tight, no moisture trace at the gasket.
- [ ] Fins on the back clear of dirt, air gap under the base plates open.
- [ ] Nothing built, stacked or racked within 75 mm of the luminaire or in the beam.
- [ ] Tilt unchanged since installation.
- [ ] **HT only:** the driver is still outside the hot zone and the silicone cable is not resting against a hot surface.

10.3 Records

Record every inspection, fault, repair and replacement, with both codes from the label. Under warranty, that record is the difference between a fast decision and a long discussion.



The finned back of the Linear. This is what has to stay clear, and on the AC version it is the driver's heat sink too

WHY THE FINS MATTER

The Linear has no fan, no vents and no moving part. Everything the LEDs produce, and on the AC version everything the driver produces, leaves through this surface, and the housing is sealed precisely so that nothing gets in. Dirt on the fins raises the junction temperature, and the lifetime figures in chapter 3 assume a clean heat sink. **The 213 lumens per watt hold for the life of the installation, but only if the fins are kept clear.** Above a flour line or in a sawmill the fins fill in a season, so brush them out at every inspection.

CAUTION

Do not hammer, pry or scrape between the fins. A soft brush and compressed air clear them. A screwdriver breaks a fin, and the fin is cast into the housing.

10.4 Cleaning, standard versions in a normal environment

1. Switch off the supply and let the luminaire cool.
2. Remove loose debris with a soft brush.
3. Clean the housing and the glass with a soft cloth or sponge, water and a mild detergent.
4. Clear the fins on the back, then dry the glass with a soft cloth. A diffuse front shows every streak in the light, so finish with a dry cloth.

CAUTION

Do not use solvents, caustic cleaners or abrasives. Do not aim a high pressure washer at the gland or at the junction box cover. The Linear is rated IP69K, but the installation around it may not be, and the gland is the one place where pressure does damage.

10.5 Cleaning, washdown areas and the high temperature range

In a food or washdown area, and on the high temperature range, the Linear is cleaned to JEL Products protocol B5.17, version 1.0 of 27 May 2026. Written for the food industry, it is the stricter of the two procedures and it is the one a HACCP file asks for. One exception: the HT range does tolerate steam.

BEFORE YOU START

- Switch off the supply to the luminaire.
- Let the luminaire cool to hand temperature.
- Inspect the glass, the seals, the gland, the cable and the housing for damage.

PERMITTED

Water	Clean mains water, lukewarm, maximum plus 40 degrees Celsius
Cloth	Soft microfibre cloth
Sponge	Soft sponge

NOT PERMITTED

Cleaning agents	No aggressive or chemical cleaners, no foaming agents, no solvents
Chemistry	No chlorine based, acid based or alkaline cleaners, no alcohols, no degreasers
Mechanical	No wire brushes, no abrasives, no scouring agents
Steam	No steam cleaning on a standard luminaire. **On the high temperature range steam cleaning is permitted**
Pressure	No high pressure above 80 bar

IP69K is what makes this possible. Every Linear carries IP69K, the high pressure steam jet test, and that is what a wash-down regime actually applies. The cast housing without end cap seams is the reason the Linear survives a regime that finishes a tube style fitting in a year.

PROCEDURE

1. **Pre-rinse.** Rinse the luminaire with clean water to remove loose soiling. Use a broad jet and do not hold it on the gland or the junction box cover.
2. **Manual cleaning.** Clean the surface with a soft sponge or microfibre cloth and clean lukewarm water only.
3. **High pressure cleaning.** Maximum 80 bar, maximum plus 40 degrees Celsius, minimum distance 50 cm. Do not spray at right angles onto the gasket for any length of time.
4. **Rinse.** Rinse the luminaire with clean water.
5. **Inspect.** Check the glass, the gasket, the fixings and for any sign of moisture inside.

PREVENTING DAMAGE

WARNING, THERMAL SHOCK

Never clean hot glass with cold water. Avoid large temperature differences. **Do not apply water at all to a luminaire warmer than plus 60 degrees Celsius.** Let it cool first. On the high temperature range that is not a formality: the front can break, and it breaks towards whoever is holding the lance.

Cleaning outside these limits can damage the glass, cause leakage, attack the seals and void both the ingress classification and the warranty.

FREQUENCY

Normal production environment	Weekly
Heavy soiling	Daily
High fat load	After every production run

Source: JEL Products document B5.17, version 1.0, 27 May 2026. Ask us for the full protocol if you need it for a HACCP file.

11 Fault finding

Work through this table before reporting a fault. Isolate the supply before any action that involves opening the junction box. Most faults reported to us on this product turn out to be the supply, the run, or a luminaire that was connected as the wrong version.

Symptom	Applies to	Probable cause	Action
No light at all	All	Supply off, breaker tripped, fuse blown, or a break in the run	Check the breaker or fuse and measure the supply in the junction box of the first dark luminaire
No light, supply present in the box	AC	Driver inside failed, or a 24 V supply on an AC luminaire	Check the supply type against the label. A failed internal driver is a luminaire exchange, section 12.2
No light, supply present in the box	DC	Reversed polarity, or the on board driver failed	Check red to plus and black to minus. Otherwise the luminaire is exchanged, section 12.2
No light, supply present at the driver	HT-AC	Driver failed, or the temperature pair not connected so the driver reads an open circuit	Check all four cores through to the junction box, then replace the driver at ground level, section 12.3
Luminaire destroyed on switch on	DC	Mains connected to a DC luminaire	Not a warranty case. Read the label, section 2.5, and replace the luminaire
Breaker trips on switch on	AC	Too many luminaires on one breaker for the inrush	Reduce the number per breaker or change the characteristic, section 7.3. On a run every luminaire counts
Residual current device trips	AC	Combined leakage current of the circuit	Split the circuit or size the device for 0.7 mA per luminaire
Last luminaires on a DC run dim or drop out	DC	Voltage drop along the run	Measure at the far end under load. Increase the cross section or add a feed point, section 7.7
Output drops back after the process heats up	HT	**Normal behaviour.** The thermal self-protection is dimming the luminaire	No action. See section 3.3. Report it only if it happens below the rated ambient
Dims back by itself, standard version	All	Thermal foldback: ambient above plus 50, fins blocked, or the air gap under the base plates packed	Check the ambient, clear the fins, free the air gap
Flicker or unstable output	All	Loose terminal in the junction box, or a dimming signal picking up interference	Retighten the terminals and separate the dimming conductors from the mains conductors
Luminaire stays at partial output	AC, HT-AC	Dimming input at a low level, or an NFC setting from a previous project	Check the control signal and the driver setting, section 9.2
Control signal does nothing	All	That protocol is not in this build	Check the quotation against section 9.2. A luminaire without dimming has no control conductors
Changes colour on its own	Bi-colour	The supply is being interrupted for less than 5 seconds	A chattering relay toggles the colour. Feed it from a clean switched circuit, section 9.3
Output visibly lower than the design	All	Dirty glass or blocked fins	Clean per section 10.4 or 10.5, then measure again
Dark gap in a run	All	A shorter length fitted in that position, or the wrong optic	Compare the article codes on the labels with the run drawing
Moisture inside the junction box	All	Gland not tightened, blanking plug missing, gasket out of its groove	Isolate, dry, refit the gasket, retighten to dimension L in section 7.6, replace the plug
Moisture inside the luminaire	All	Chipped glass edge or a luminaire rested on its glass	Do not open it. Return to JEL Products, section 12.4
Luminaire has rolled out of aim	All	Index screws not seated, or pivots loosened by vibration	Re-aim, seat both index screws in the same hole and retighten to torque
Luminaire came loose	All	One bracket, an anchor that failed, or no secondary retention	Refit per chapter 6 on two brackets with a rated safety cable and anchors suited to the surface
Early driver failure, repeated	HT-AC	The driver ambient is above plus 50 degrees Celsius, or the driver is inside the hot zone	Measure the ambient at the driver. Relocate it, section 7.5

If the fault is not in this table, or if the action does not resolve it, contact JEL Products with the article code and the internal production code from the type label, the position on site, the date of installation and what you have already checked. See section 2.5 for the two codes.

12 Repair and spare parts

The Linear is built so that nothing needs to be reached in service, and that cuts both ways. On the HT-AC versions the driver sits outside the housing and is replaced at ground level. On the standard AC version the driver is inside the sealed housing, and on the DC versions it is on the board: there, a driver fault is a luminaire exchange.

12.1 What is replaceable on site

Part	Reference	Note
Remote driver, HT-AC, 300 and 600 mm	BLD075	131 × 68 × 33.5 mm, 650 g, 90 to 305 VAC. Replaced without opening the luminaire. Quote the length
Remote driver, HT-AC, 900 and 1,200 mm	BLD120	161 × 68 × 33.5 mm, 800 g, 90 to 305 VAC. Quote the length
Driver box	DRB-1	276 × 194 × 86.5 mm, 4.2 kg, IP66 and IP67. One driver up to 320 W
316L Power Box	Power Box BLD075	Solid 316L, where the box sits in the same wash-down zone as the luminaire
Bracket	On request	Complete with sliding nuts, M8 bolts and index screw. Always two per luminaire, section 3.2
Sliding nuts and index screws	On request	Supplied as a set per bracket
Cable gland and blanking plug	M20 × 1.5	With O-ring. The second gland for linking a run
Junction box cover gasket	On request	Replace whenever it has been out of its groove or has taken a set
Safety cable	On request	1 m, rated to the luminaire weight and length. Not supplied as standard, see section 6.5
Cable assembly	On request	H07BQ-F, or SiHF-OB silicone for the HT range. Length per order

Brackets, gaskets, safety cables and cable assemblies are supplied against a specification rather than a shelf article number, because they follow the length and the run. State both codes from the type label and we issue the right part.



DRB-1 driver box. One driver up to 320 W, so it takes the BLD075 or the BLD120 of an HT-AC Linear with room to spare



The junction box cover, gland and blanking plug are the only parts of the housing that are opened in service

Quote the article code and the internal production code from the type label in any spare part order, see section 2.5. A BLD075 programmed for a LIN30 does not run a LIN60, and a BLD120 for a LIN90 does not run a LIN120.

12.2 What is not replaceable on site

DANGER

Do not open the housing beyond the junction box and do not remove the glass. Opening the luminaire ends its ingress protection, its electrical safety, its warranty and its declaration of conformity.

- The light source is not replaceable in the field. At the end of its life the complete luminaire is returned or replaced.
- The optics are fitted at the factory. A change of beam angle is a change of luminaire.
- **On the standard AC version the driver is inside the sealed housing** and is not a field part, and on a DC luminaire it is on the board. A driver fault means the luminaire is exchanged. That is the trade for having nothing outside the housing on a process line.
- The glass and its seal are not replaceable in the field. A chipped or cracked front returns to JEL Products.
- Repair, overhaul and modification are carried out by JEL Products or by a company it appoints. In case of doubt, return the luminaire for inspection.

12.3 Driver replacement, HT-AC

1. Isolate the supply and secure it. Verify the circuit is dead. Let the luminaire and the cable cool.
2. Open the driver box or the junction box the bare driver sits in, and photograph the wiring before you disconnect anything. Note the ambient: if it is above plus 50 degrees Celsius, the position is the fault and the new driver will fail as well.
3. Disconnect the driver at CON 1 and CON 2, following the table in section 7.2.
4. Fit the replacement driver of the same type and programmed for the same length, and reconnect according to section 7.2, one conductor per terminal. A different driver is not permitted.
5. Close the box, check the seal, restore the supply and run the checks in section 8.1. Record the replacement, with the date and both codes from the label, in the site documentation.

NOTE

The internal production code tells us which board is in the luminaire the driver has to work with. Quote both codes.

12.4 Returning a luminaire

1. Contact JEL Products before you send anything. We will tell you whether the fault is a field repair, a driver exchange or a return.
2. Have both codes from the type label ready, plus the position on site, the date of installation and what you have already checked from chapter 11.
3. Pack the luminaire in its original box, glass up, resting on its back, never standing on its end. Leave the brackets on it. A 1,230 mm luminaire in a box that is too short arrives with a bent end cap, and that damage masks the fault.
4. On an HT luminaire, let it cool completely and state the ambient it was working in. Coil the silicone cable rather than folding it.

NOTE

Do not open a luminaire before returning it, not even to look. An opened housing changes a warranty assessment into a discussion, and the evidence we need is usually inside the seal you would break.

WHAT WE LOOK AT ON A RETURN

The internal code	Which board, which batch, which production date
The gasket and the gland	Whether water got in, and from where
The driver	Case temperature history and failure mode, inside or outside
The glass	Thermal shock, impact or a chipped edge
The brackets	Whether both were used, and whether a retention was fitted
The supply	Whether a DC luminaire saw mains, or an AC luminaire a run it was not calculated for

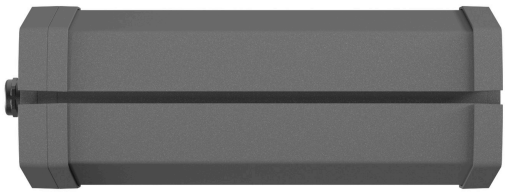

Linear HT. The high temperature version returns with its silicone cable, which is part of the luminaire and not an accessory

13 Removal and disposal

13.1 Taking the luminaire out of service

1. Isolate the supply and secure it. Verify the circuit is dead, then disconnect the luminaire in its junction box, at the driver box on an HT-AC version, or at the DC distribution. On a run, the link cable to the next luminaire comes out too.
2. On the HT range, let the luminaire and its cable cool to hand temperature and wait for the zone to be released. It gives no visual warning that it is still hot.
3. Refit the blanking plug or cap the gland, so the housing stays sealed in storage.
4. Two people on the LIN90 and the LIN120. Release the secondary retention last, not first.
5. Undo the four structure bolts with the housing held level throughout. Leave the brackets on the luminaire.
6. Label the luminaire with its position, length and article code before it leaves the site. If it is to be reinstalled, pack it in its original box, glass up, resting on its back and never standing on its end.

WARNING, WORKING AT HEIGHT

Removal is the moment a luminaire falls. Have the second person on the platform before you loosen anything, and keep the area below clear. A 1,230 mm housing that comes off one bracket swings before it drops.

13.2 Disposal



Electrical equipment does not belong in household or unsorted municipal waste. Under European Directive 2012/19/EU it must be collected separately and processed by an approved recycling facility. Observe the national and regional rules at the place of disposal.

The cast aluminium housing, the end caps and the aluminium brackets are recyclable materials; the LED board, the driver inside an AC version or outside an HT-AC version, the glass and the cable go to electronic waste and glass. Separate the housing from the electronics at the recycler rather than in the field. The Linear contains no mercury and no lead above the RoHS limits.

Glossary

Beam angle	Full angle between the directions where the intensity has fallen to 50 per cent of the peak. The field angle uses 10 per cent
BIC	Bi-colour build, 4000 K with amber, switched from the supply
C5	Corrosivity category per ISO 9223, industrial and marine
Cd · A	Drag coefficient times frontal area, the figure used for wind load
CRI, Ra	Colour rendering index
DALI-2	Addressable digital lighting control protocol, on the AC versions
Diffuse front	The frosted glass that spreads the light of the LED board, 136 degrees without an optic
Hazard distance	The distance beyond which the luminaire is Risk Group 1 per IEC/TR 62778
HT	High temperature range
Index disc	The seven-hole disc on the bracket pivot that locks the tilt with the M4 screw
IK	Impact rating per IEC 62262
Junction box	The end cap of the housing with the terminals and the two M20 entries
L90B05	90 per cent of initial output retained by 95 per cent of the units
LIN30 to LIN120	The type names on the datasheet: the length in centimetres, not the wattage
MCB	Miniature circuit breaker
NFC	Near field communication, used to set the driver without power
NTC	Negative temperature coefficient, the temperature sensor in the luminaire
PWM	Pulse width modulation, a dimming method
Run	Several luminaires linked end to end on one feed, calculated by JEL Products
SiHF-OB	Heat resistant silicone cable, used on the high temperature range
Sliding nut	The nut in the slot along the top of the housing that the bracket bolts into
Ta, Tc	Ambient temperature, and the case temperature of the driver
ULOR	Upward light output ratio
WEEE	Waste electrical and electronic equipment

Specifications are subject to change. This manual describes the standard configurations. Where a project specification differs, the project documentation takes precedence.

14 Appendix

14.1 Declaration of conformity

EU Declaration of Conformity, 9 December 2025

JEL Products B.V., Ampèrestraat 19e, 3861 NC Nijkerk, The Netherlands, declares under its sole responsibility that the products it covers are in conformity with the essential requirements of the directives below. The Linear Series is named in its product scope as **Linear Series, LIN30, LIN60, LIN90 and LIN120 including the HT versions**, with all electrical, optical and mechanical variants within the defined type codes, wattages, voltages and colour temperatures.

DIRECTIVES	
Low Voltage	2014/35/EU
EMC	2014/30/EU
RoHS	2011/65/EU and (EU) 2015/863
WEEE	2012/19/EU

DECLARATION	
Date	9 December 2025
Place of issue	Nijkerk
Signed by	L. de Graaf, Technical Director
Serial number	See product marking
Year of manufacture	2024 to 2026

APPLIED HARMONISED STANDARDS

EN IEC 60598-1 luminaires, general requirements. EN IEC 60598-2-1 fixed general purpose luminaires. EN IEC 61347-1 lamp controlgear, general. EN IEC 61347-2-13 LED controlgear. EN IEC 62384 LED driver performance. EN IEC 60529 IP classification. EN IEC 61000-6-2 EMC immunity, industrial. EN IEC 61000-6-4 EMC emission, industrial. EN ISO 12100 risk assessment, where applicable.

The technical file is compiled and maintained by JEL Products B.V. at the address above. The **signed declaration** is available on request and is supplied with the project documentation. Document: EU DECLARATION OF CONFORMITY_DCbright_EU_09122025.

14.2 Warranty

Family	Housing	Electrical and seals
Linear AC, driver inside	5 years on the complete luminaire, driver included	
Linear DC	5 years on the complete luminaire	
High temperature	5 years on the complete luminaire, to plus 120 degrees Celsius on AC and plus 110 on DC	
Brackets and junction box gasket	5 years. The gasket is replaced whenever the cover has been off in a washdown area	

Warranty runs from the date of delivery under the JEL Products warranty terms and covers material and manufacturing defects.

It does not apply where the luminaire has been installed, operated or maintained contrary to this manual, where the housing has been opened beyond the junction box, where mains has been connected to a DC version, where the supply was outside the range on the type label, where the temperature pair of an HT-AC version has been disconnected or shorted, where the driver has been installed inside a hot zone or above plus 50 degrees Celsius ambient, where the luminaire has been hung on one bracket, where a run carried more luminaires than it was calculated for, where it has been cleaned outside the limits in section 10.5, or where it has been used outside the intended use in section 2.2.

> **NOTE**
>
> Improper installation, operation or maintenance may also invalidate the certificate and the declaration of conformity, not only the warranty.

14.3 Related documents

Document	Where
Linear datasheet, AC and DC in four lengths	Product page
Linear HT datasheet	Product page
Photometric files per optic and length, EULUMDAT and IES	Product page
Dimensioned drawings, DXF and STEP	On request
Run calculation for a continuous line	With the quotation
Driver box manual, DRB-1	On request
Signed declaration of conformity	On request, and with the project documentation
Test and inspection reports, see section 3.4	On request

14.4 What this manual replaces

This edition supersedes all earlier Linear operating instructions: the generation 1.5 instruction for the Linear HT, the DCbright instruction of 2 March 2026 for the Linear AC, the instruction of 6 July 2026 for the Linear HT generation 2.0, and the separate driver sheet LIN90-120-HT. Where an older document and this manual disagree, this manual applies.

Five points are corrected against documents in circulation: the standard AC version carries its driver **inside the housing** and is not delivered with a driver box, as the 2026 instruction lists; the AC weights are **3.45, 5.05, 6.8 and 8.4 kg** with the driver inside and not the 2.8 to 7.6 kg the datasheet gives for every version; the impact rating is **IK09** and not IK08; and the warranty is **5 years on the complete luminaire**, with the expected life stated as **TM-21 L90B05 above 360,000 h at 50 degrees Celsius**, not as the 3 years on the driver and the LM70 figures in the 2026 instruction; and LVAC01 to 04 are **Class I**, earthed on the PE terminal because the driver is inside, where the datasheet prints Class II for every version. The bracket range is stated as minus 90 to plus 90 degrees on the datasheet and 0 to 45 degrees in the 2026 instruction; the index disc carries seven positions, and this manual describes it that way.

> **NOTE**
> If you hold a printed copy, check the revision on the cover against the version on the product page before you rely on a figure. A manual in a site file can be several years old.

CONTACT

JEL Products B.V.

Ampèrestraat 19e
3861 NC Nijkerk
The Netherlands

+31 (0)33 785 9809
info@jelproducts.nl
jelproducts.nl

To verify the authenticity of a test or inspection report and certificate, contact us on the number above. Quote both codes from the type label.

Product page

Photometric files, drawings, the datasheets and the current version of this manual.

jelproducts.nl/en/products/linear

DOCUMENT

Number	MAN-LVS-EN
Revision	2
Date	18 November 2026
Language	English
Applies to	LVAC01 to LVAC04, LVDC01 to LVDC04, LVHT01 to LVHT08
Pages	See the footer